ITEM NO.	PART NUMBER	DESCRIPTION	Default/ QTY.
1	PSRD8-12	BASE TUBE	2
2	SM-LP-Cast	RING	2
3	RGSMT	CONNECTOR	2
4	CARD-58	BOTTOM BALL	2
5	TU1-17.4	TUBE	1

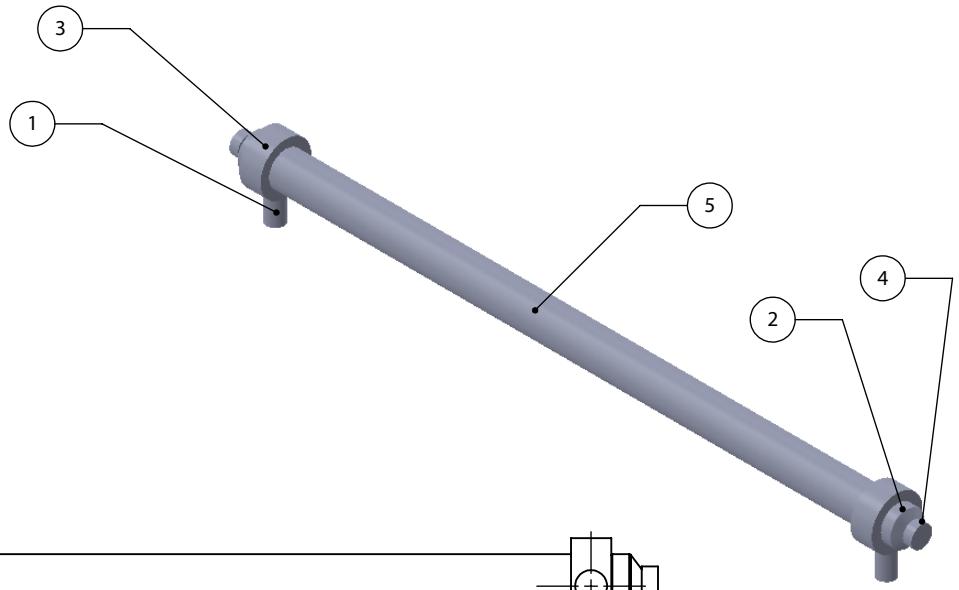

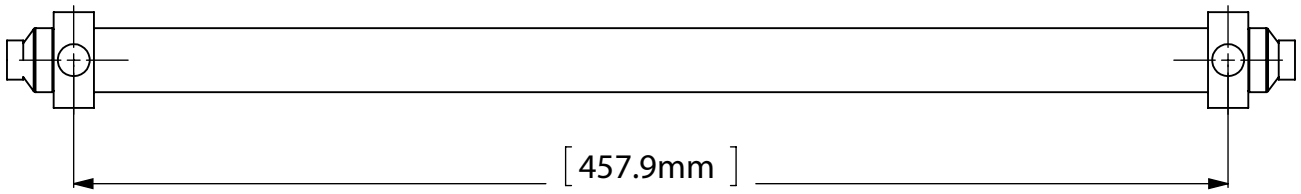

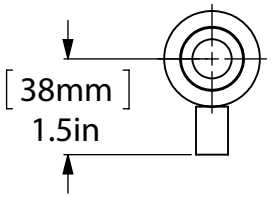

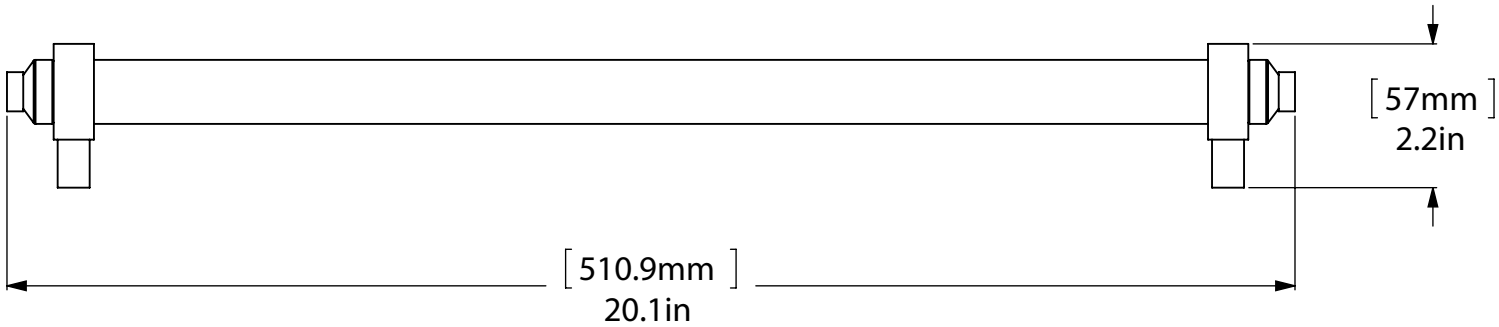

CONFIDENTIALITY/LIMITED LIABILITY STATEMENT
This document (and any files attached to it) is confidential and intended only for the person or entity to which it is delivered. If you are not the intended recipient, then you have received this document by mistake and any use, dissemination, forwarding, printing or copying of this document and its file attachments is prohibited. Please notify ALLIED BRASS INC. immediately either by telephone or by email, delete the misdirected document from your system and destroy any copies you have made of it. We do not accept any liability for any loss or damage which may arise from your receipt of this document.

UNLESS OTHERWISE STATED

DO NOT SCALE DRAWING

CHAMFER ALL EDGES 0.5X45°

DRAWING ISO

FIRST ANGLE PROJECTION

X.XXX	+/-0.025
X.XX	+/-0.1
X.X	+/-0.25
X	+/-0.75

ANGLES

X.XX	+/-0.05°
X.X	+/-0.1°
X	+/-0.5°

MACHINED FINISH 3.2

	INITIALS	DATE	ITEM	QTY	DRG/PART NO	CLIENT:
DESIGNED		IJM	MATERIAL	BRASS	WEIGHT	
DRAWN		IJM	HEAT TREAT	NA		
CHECKED		R. ANDRIS	CUSTOMER		CUSTOMER No	
PROJ.ENG			DESCRIPTION:			
SAFETY						
APPROVED		R. ANDRIS	403-RP			
FILENAME	403-RP					

FINISH	TBD
QUANTITY	---
DRAWING No.	403-RP
REV	0
SCALE	1:3
SHEET: 01	A4