Aquadom®
Something New

SOHO S-2436 - Specification Sheet

Features

- Backlit LED Mirror
- One touch switch with dimmer and memory function
- Energy efficient LED lighting 6500K ,white color
- CRI 80+
- Includes Defogger , with push button
- MEANWELL brand LED driver (50W)
- Luminous : 3283LM

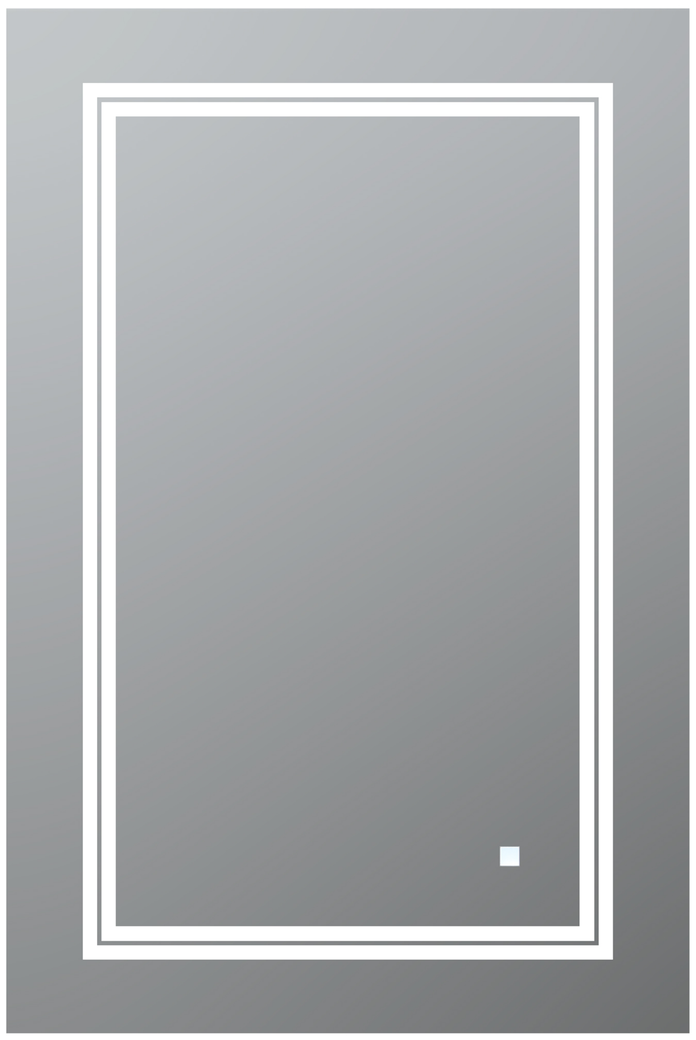

Construction

- Aluminum frame
- Quality polished edge mirror
- Single field wire installation
- Constructed for surface mounting
- Includes installation hardware

Codes/Standards Applicable

- SOHO Mirror is ETL certified to:
  - UL 962
  - CSA Standard C22.2 No. 250.0

Dimensions

Height: 36" (913 mm)

Width: 24" (609 mm)

Depth: 1" (26 mm)

Electrical System

- INPUT : 110-240V~ 0.6A 50/60Hz
- OUTPUT : max.13V
- Field Wire location as shown in drawing
- Circuit Diagram

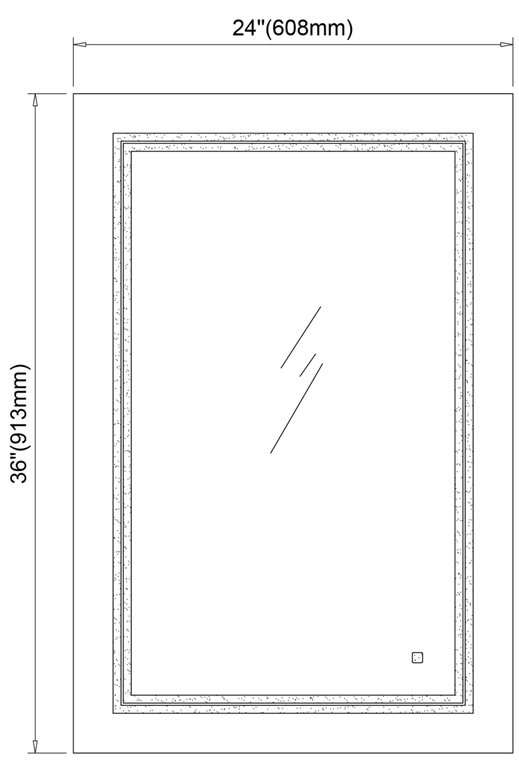

Front view

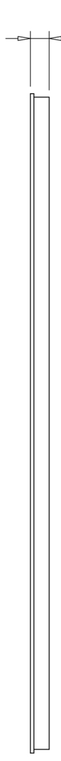

Side view

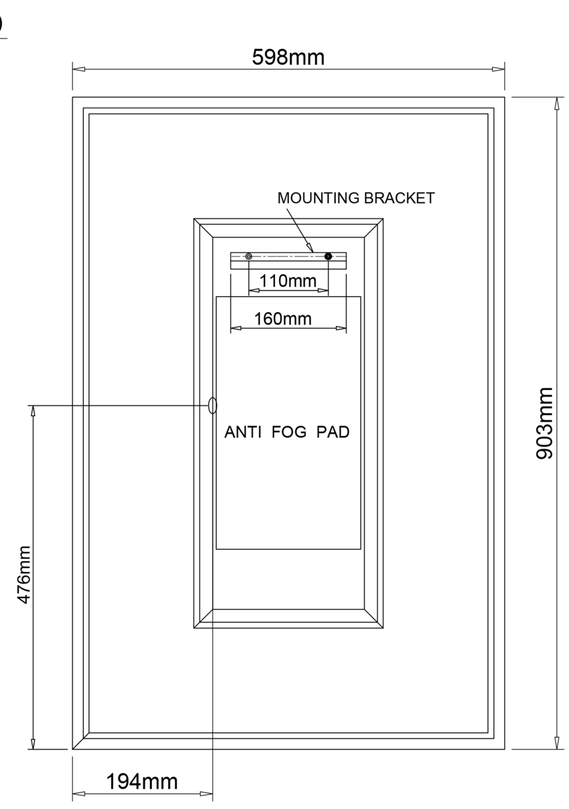

Back view for electrical knockout location

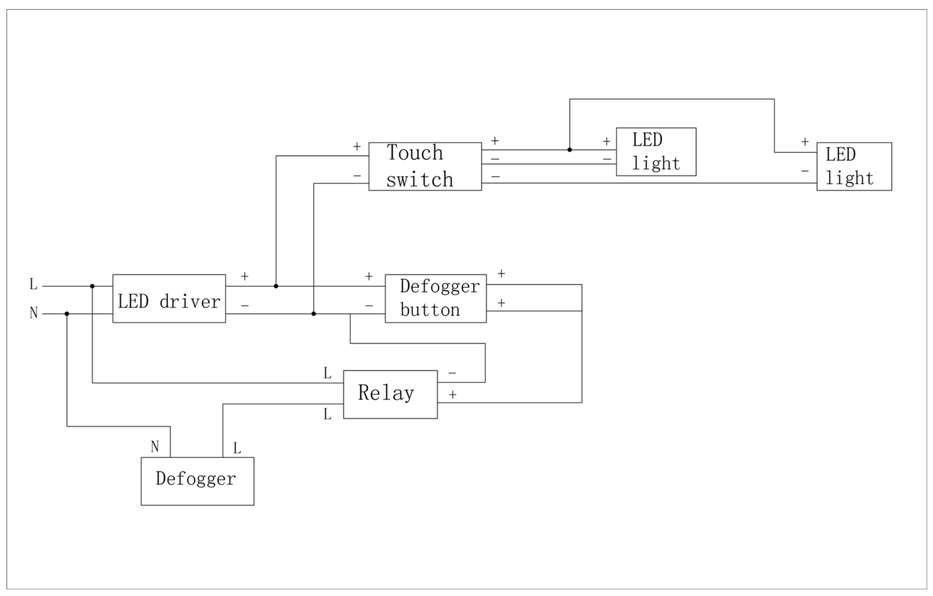

Circuit diagram

NRG DISTRIBUTION.INC
20 Haypress Rd ,Unit 319,Cranbury NJ 08512