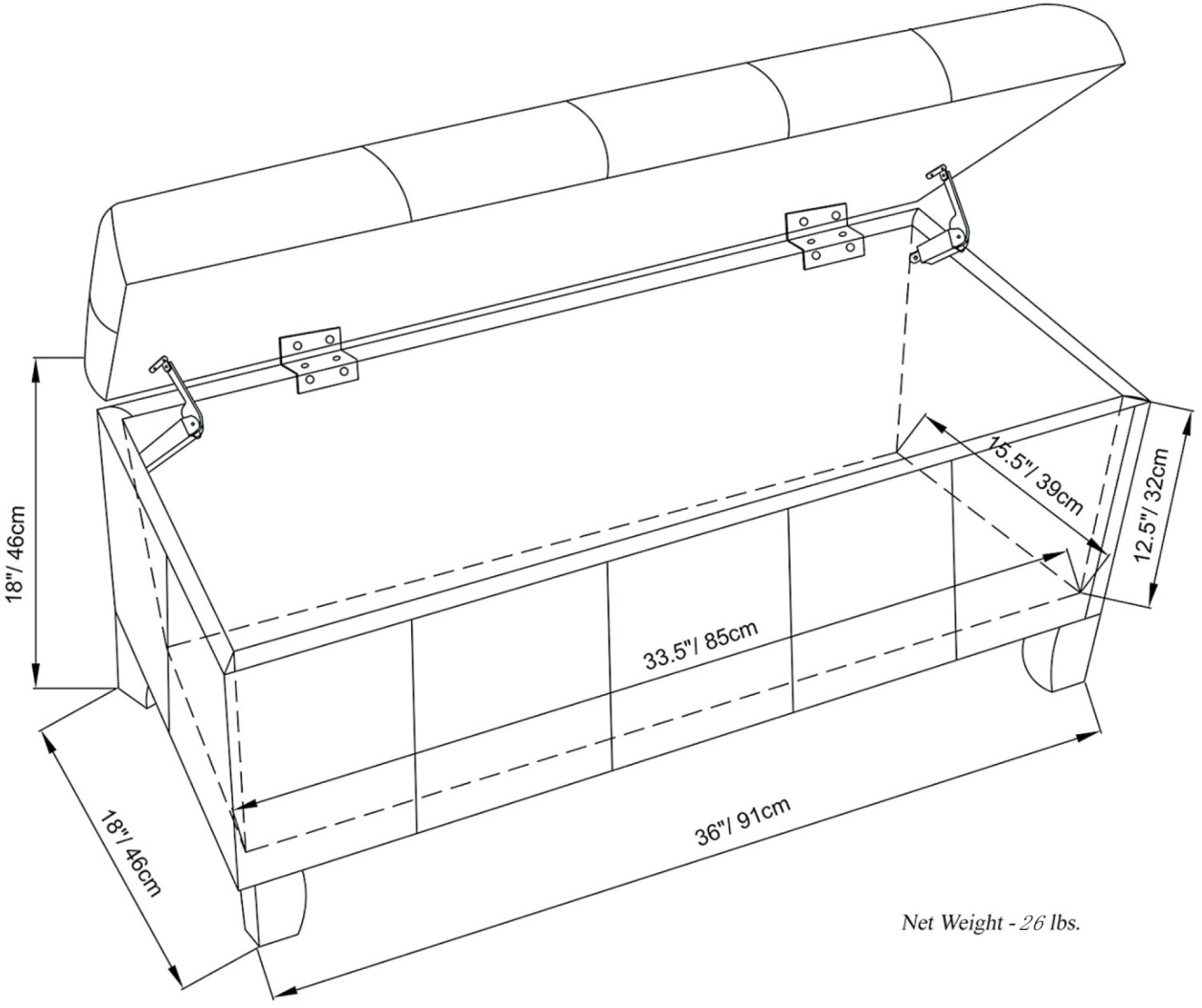

Net Weight - 26 lbs.