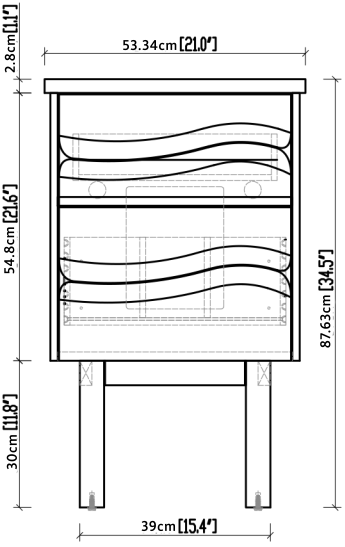
53.34cm [21.0"]
2.8cm [1.1"]
54.8cm [21.6"]
87.63cm [34.5"]
30cm [11.8"]
39cm [15.4"]

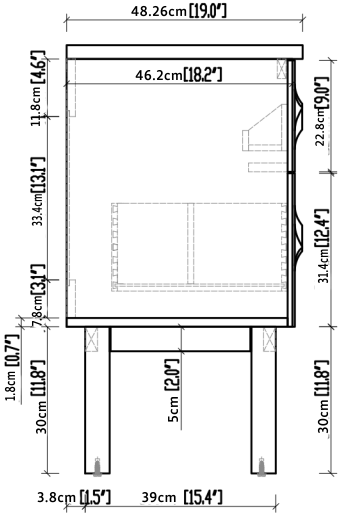
48.26cm [19.0"]
46.2cm [18.2"]
11.8cm [4.6"]
22.8cm [9.0"]
33.4cm [13.1"]
31.4cm [12.4"]
3.1" 7.8cm
1.8cm [0.7"]
30cm [11.8"]
5cm [2.0"]
30cm [11.8"]
3.8cm [1.5"]
39cm [15.4"]

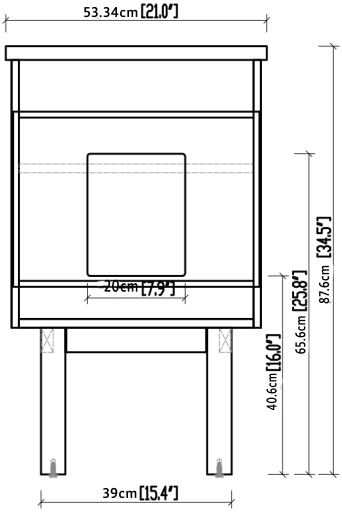
53.34cm [21.0"]
20cm [7.9"]
65.6cm [25.8"]
87.6cm [34.5"]
40.6cm [16.0"]
39cm [15.4"]

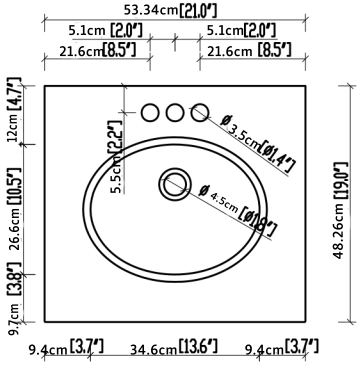
53.34cm [21.0"]
5.1cm [2.0"]
5.1cm [2.0"]
21.6cm [8.5"]
21.6cm [8.5"]
12cm [4.7"]
5.5cm [2.2"]
Ø 3.5cm [Ø1.4"]
Ø 4.5cm [Ø1.8"]
26.6cm [10.5"]
48.26cm [19.0"]
9.7cm [3.8"]
9.4cm [3.7"]
34.6cm [13.6"]
9.4cm [3.7"]

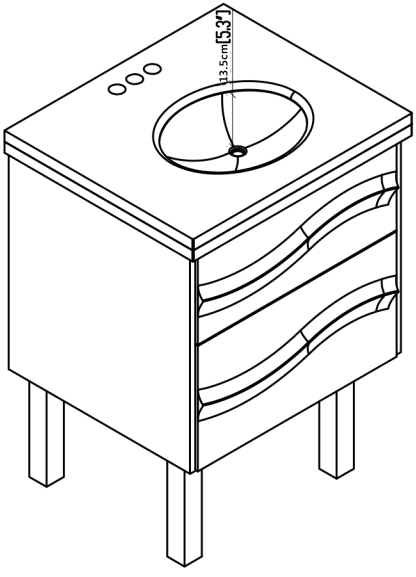
13.5cm [5.3"]

Marlowe 20