KS3811,5,8AL
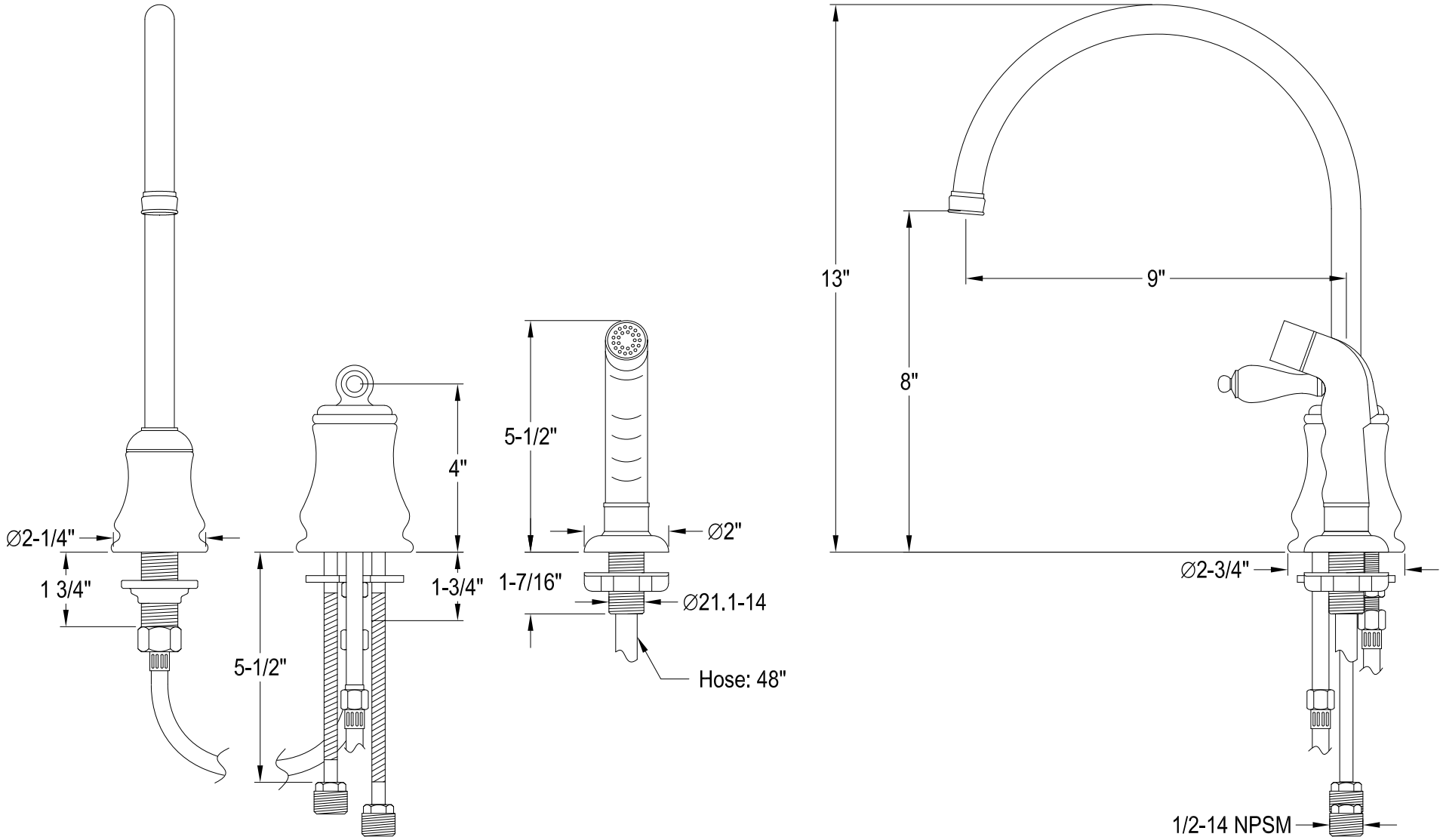
Widespread Kitchen Faucet With Sprayer