KS4641,2,5,8ML
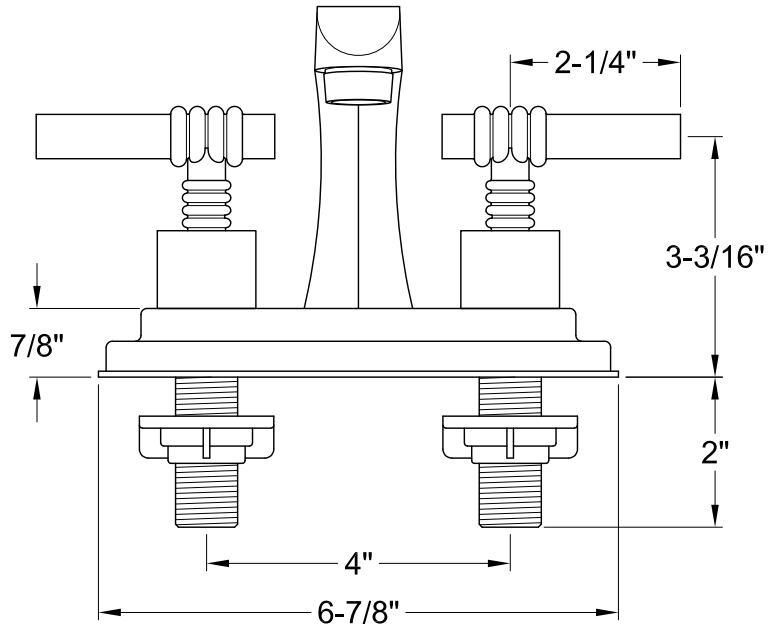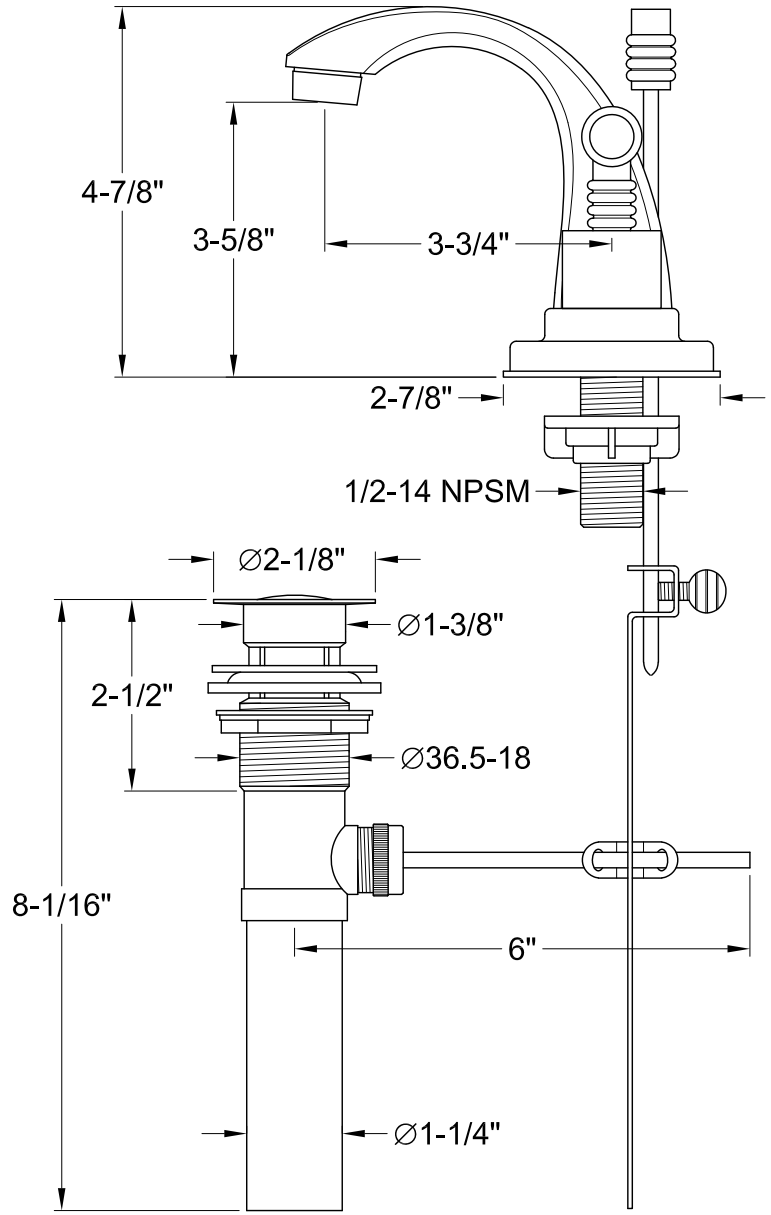
Twin Handles 4" Centerset Lavatory Faucet With Brass Pop-Up