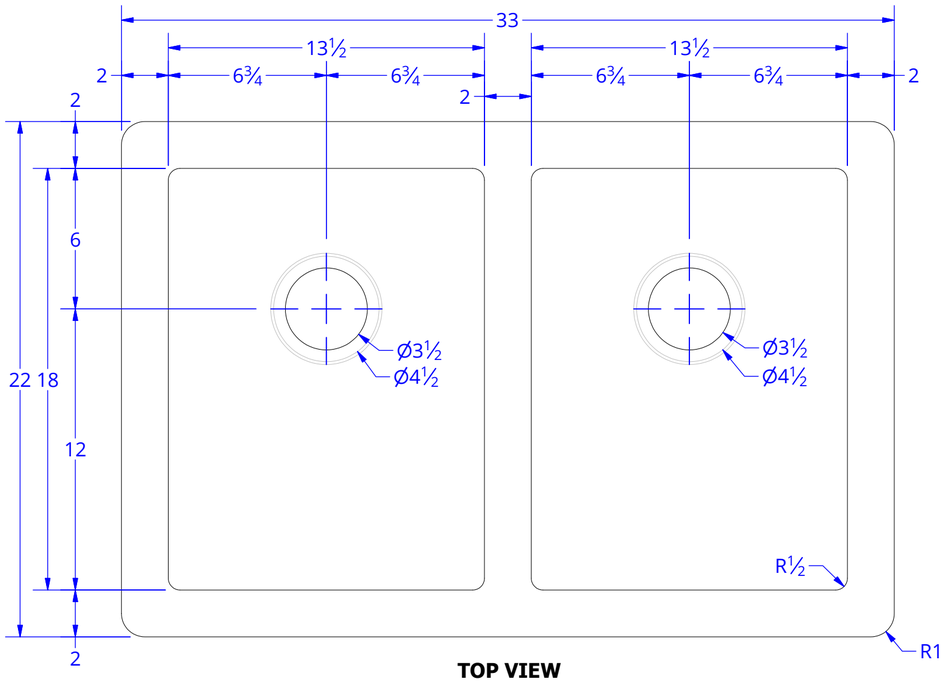

TOP VIEW

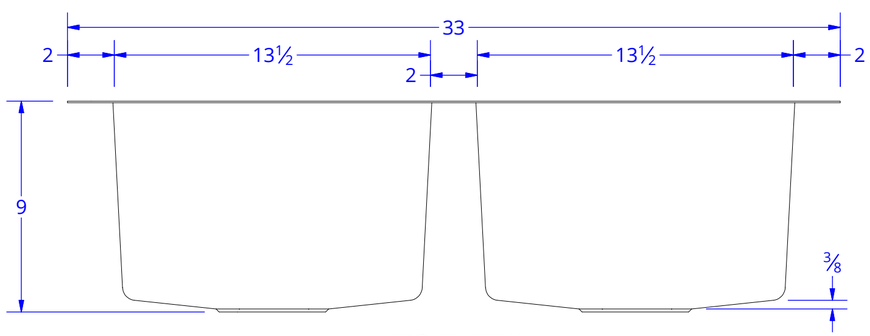

FRONT VIEW

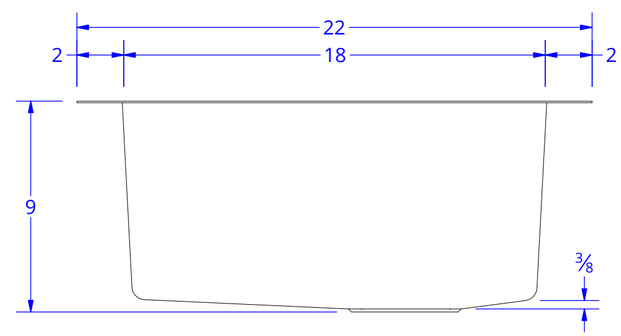

SIDE VIEW

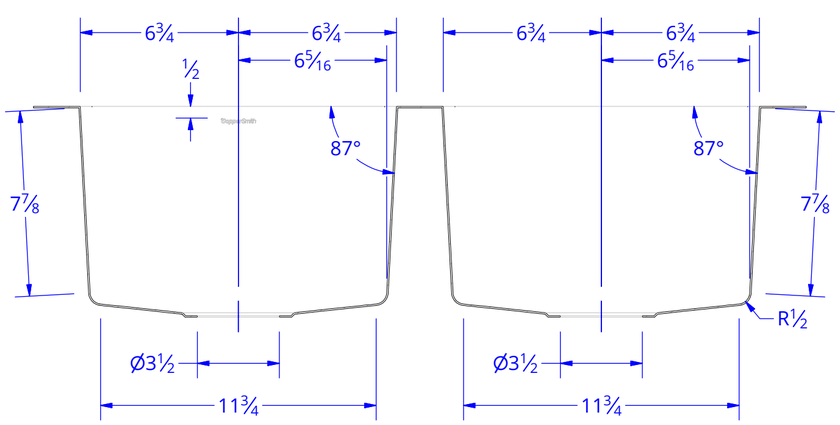

SECTION VIEW

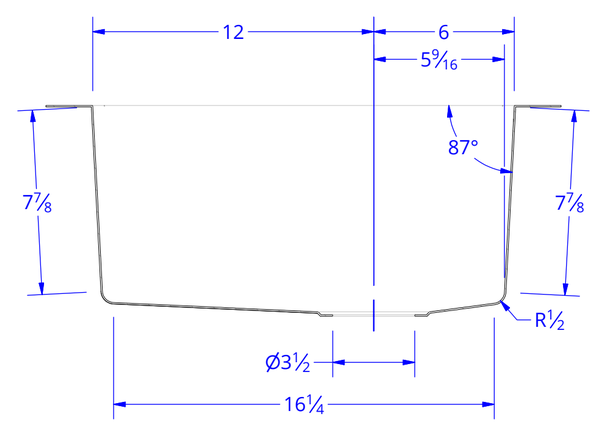

SECTION VIEW

Displayed colors are for visualization purposes only.
Displayed dimensions do not include accessory components including straps and rivets.

WORLDCOPPERSMITH.COM | RANGE HOODS | SINKS | TUBS | TABLES | FIRE PITS | PLANTERS | COOKWARE

CopperSmith
7700 68th Ave #100
Brooklyn Park, MN 55428
888-431-4677

PO: N/A

Address:
N/A

Phone: N/A

Email: N/A

Shipping: N/A

Specifications

Model: Undermount DB

Style: Classic

Gauge: 16 ga

Width: 33"

Depth: 22"

Height: 9"

Bowl: 50/50

Finish: Aged Copper

Texture: Hand Hammered

Sealer: Living

Drain 1: None

Drain 1 SKU: None

Drain 2: None

Drain 2 SKU: None

Quantity: 1

Comments:

Weight: 35 lbmass

Tolerance
FRACTIONAL ± 1/8 inch

Proprietary Notice
This drawing sheet and contents herein are the property of CopperSmith. Use of this drawing, contents or design concepts for purposes other than estimating, drawing preparation and/or manufacturing for CopperSmith shall be cause for legal recourse by CopperSmith.

Drawn Date	Scale	Rev
2/19/2021	1 : 5	1

Undermount DB
CSS-UDB

CSS-UDB-33922-16