Product Specs Sheets

Cover Page

Ambra 90 Pack 1

Features

- Complete Vanity Unit With Mirror
- Available in 6 Finishes: Glossy White, Nordic Oak, Anthracite, Samara Ash, Matte White, and Matte Sand
- Wall-hung design offers a clean, streamlined look
- Two soft close drawers with organizer in upper drawer
- Includes integrated sink and vanity top in gloss white ceramic with faucet hole and overflow
- Fully assembled with structure and front made of engineered wood in wood finishes and high gloss lacquered
- Handle integrated in front of furniture
- Hidden hanging bracket directly assembled with great resistance and depth regulations
- Made in Spain

Related Items:

- WSBC 53991 | Push Waste Drain
- WSBC 53922 | Decorative Trap

Finishes:

- Nordic Oak
- Samara Ash
- Glossy White
- Anthracite
- Matte White
- Matte Sand

SKU# | Options:

- Ambra 90 Pack 1 NO | Nordic Oak
- Ambra 90 Pack 1 SA | Samara Ash
- Ambra 90 Pack 1 WG | Glossy White
- Ambra 90 Pack 1 AN | Anthracite
- Ambra 90 Pack 1 WM | Matte White
- Ambra 90 Pack 1 SM | Matte Sand

Codes & Standards:

- CARB2 Compliant and Certified
- TSCA Compliant and Certified

*** WS Bath Collections reserves the right to revise dimensions or information on this sheet without notice**

Collection |	Model |	Dimensions Metric	
Ambra	Ambra 90 Pack 1	*1 inch = 2.54 cm* *1 inch = 25.4 mm*	WS® BATH COLLECTIONS 1051 Lea Drive - Collegeville, PA 19426 Tel. 215 513 9400 - Fax 610 831 0215 www.wsbathcollections.com - info@wsbathcollections.com

Product Specs Sheets

Technical features

Technical drawing	Name	Material	Colour	Colour
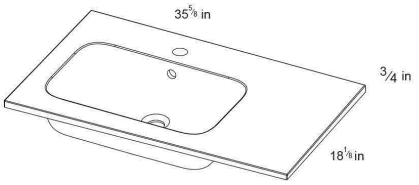	**SALONE**			Gloss White
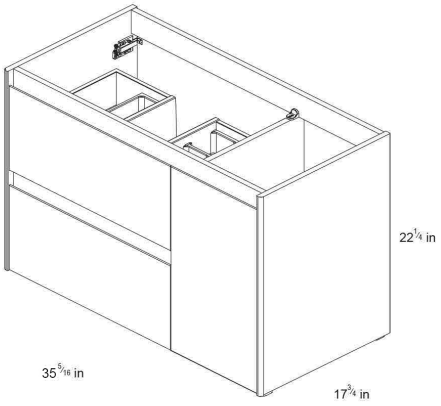	**AMBRA** 1 Door / 2 Drawers		Nordic Oak	
			Samara Ash	
			Gloss White	
			Anthracite	
			Matte Sand	
			Matte White	

Technical information

STRUCTURE	MDF board in 5/8 in. continous wrapping in 2D/ Cyclum Process.
FRONT	MDF board in 5/8 in. continous wrapping in 2D/ Cyclum Process.
HANDLE	Integrated in the front of the furniture.
DRAWER	Drawers made in mokka textile polylaminate coated board with hidden parcial extraction runners with soft close system. Includes organizer in upper drawer. Lower drawer useful space (widexhighxdepth): $20^{1/16}$ x $4^{5/16}$ x $12^{2/4}$ in.
WALL HANGING BRACKET	Hidden hanging bracket of directly assembled with great resistance and depth regulations.
HINGE	105° opening, $1^{3/8}$ in. cap, easy assembly and soft close system.
LEGS	Metallic in bright chrome finish. (optional)
PIPE DEPTH	Pipe depth $2^{1/54}$ in.

Collection	Model |	Dimensions Metric	
Ambra	Ambra 90	*1 inch = 2.54 cm* *1 inch = 25.4 mm*	WS® BATH COLLECTIONS 1051 Lea Drive - Collegeville, PA 19426 Tel. 215 513 9400 - Fax 610 831 0215 www.wsbathcollections.com - info@wsbathcollections.com

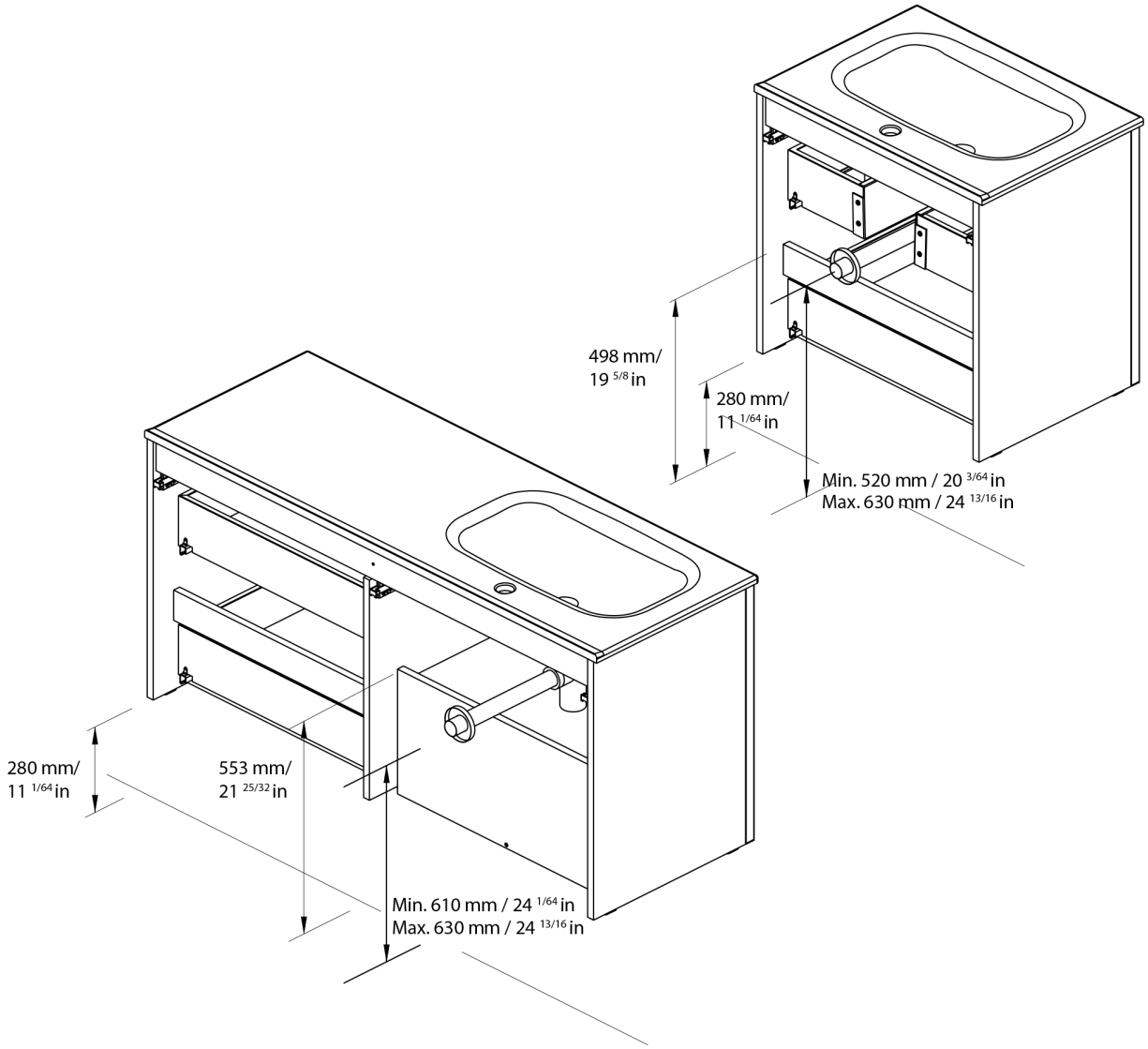

ES	EN
Las cotas indicadas en los dibujos son en función de la altura de la pata del conjunto, en caso de que el mueble vaya suspendido y esta altura no se respete, dichas cotas también variarán.	Dimensions indicated in the drawing are based on the level of the whole leg, in case of wall hanging the furniture dimensions also may vary.

Collection Ambra	**Model** | Ambra 90	Dimensions Metric *1 inch = 2.54 cm* *1 inch = 25.4 mm*	WS® BATH COLLECTIONS 1051 Lea Drive - Collegeville, PA 19426 Tel. 215 513 9400 - Fax 610 831 0215 www.wsbathcollections.com - info@wsbathcollections.com

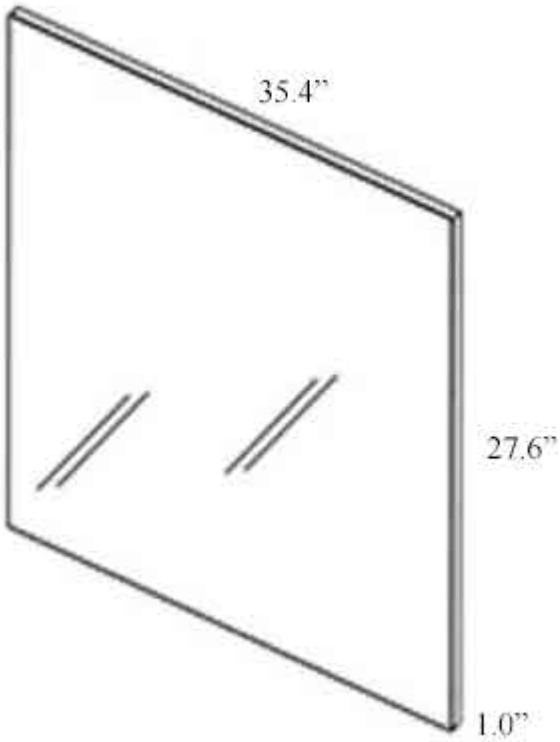

Collection	Model	Dimensions Metric	
Murano	Murano 90	*1 inch = 2.54 cm* *1 inch = 25.4 mm*	WS® BATH COLLECTIONS 1051 Lea Drive - Collegeville, PA 19426 Tel. 215 513 9400 - Fax 610 831 0215 www.wsbathcollections.com - info@wsbathcollections.com

Product Specs Sheets

We recommend the following items that work with your sink.

Ambra 90 Pack 1

TRAPS

WSBC 53922
Our best seller

Polished Chrome
WSBC 53922.29

Matte Black
WSBC 53922.22

WSBC 5392

Polished Chrome
WSBC 5392.29

WSBC 53925

Polished Chrome
WSBC 53925.29

WSBC 53921
Space saving

Polished Chrome
WSBC 53921.29

Matte Black
WSBC 53921.22

DRAINS

WSBC 53991
Push waste drain (click clack)
with overflow

Polished Chrome
WSBC 53991.29

Glossy White
WSBC 53991.09

Glossy Black
WSBC 53991.18

Matte White
WSBC 53991.26

Matte Black
WSBC 53991.22

MOUNTING HARDWARE

Wall-mount installation

Bolts

Vessel/ countertop installation

Silicone *(optional)*

Collection	Model	Dimensions Metric	
Ambra	Ambra 90 Pack 1	*1 inch = 2.54 cm* *1 inch = 25.4 mm*	WS® BATH COLLECTIONS 1051 Lea Drive - Collegeville, PA 19426 Tel. 215 513 9400 - Fax 610 831 0215 www.wsbathcollections.com - info@wsbathcollections.com