CC3004T1,CC3003T2,5,8

Wall Mount Tub Filler

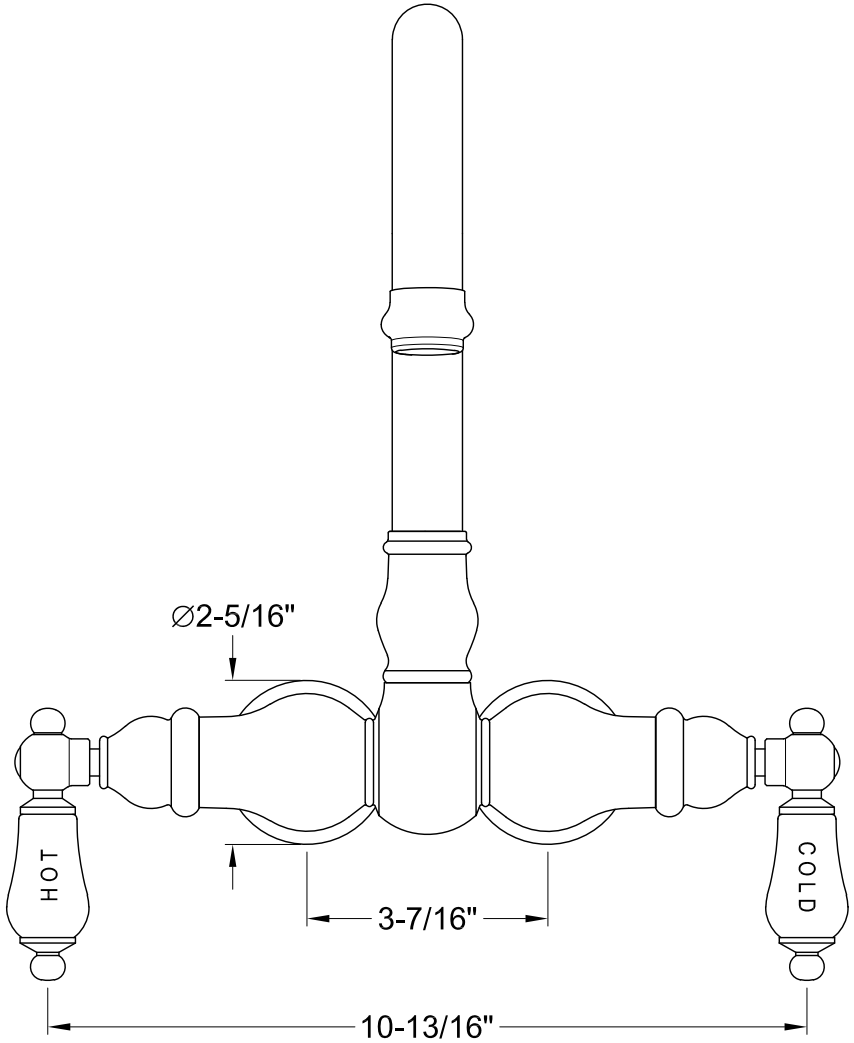

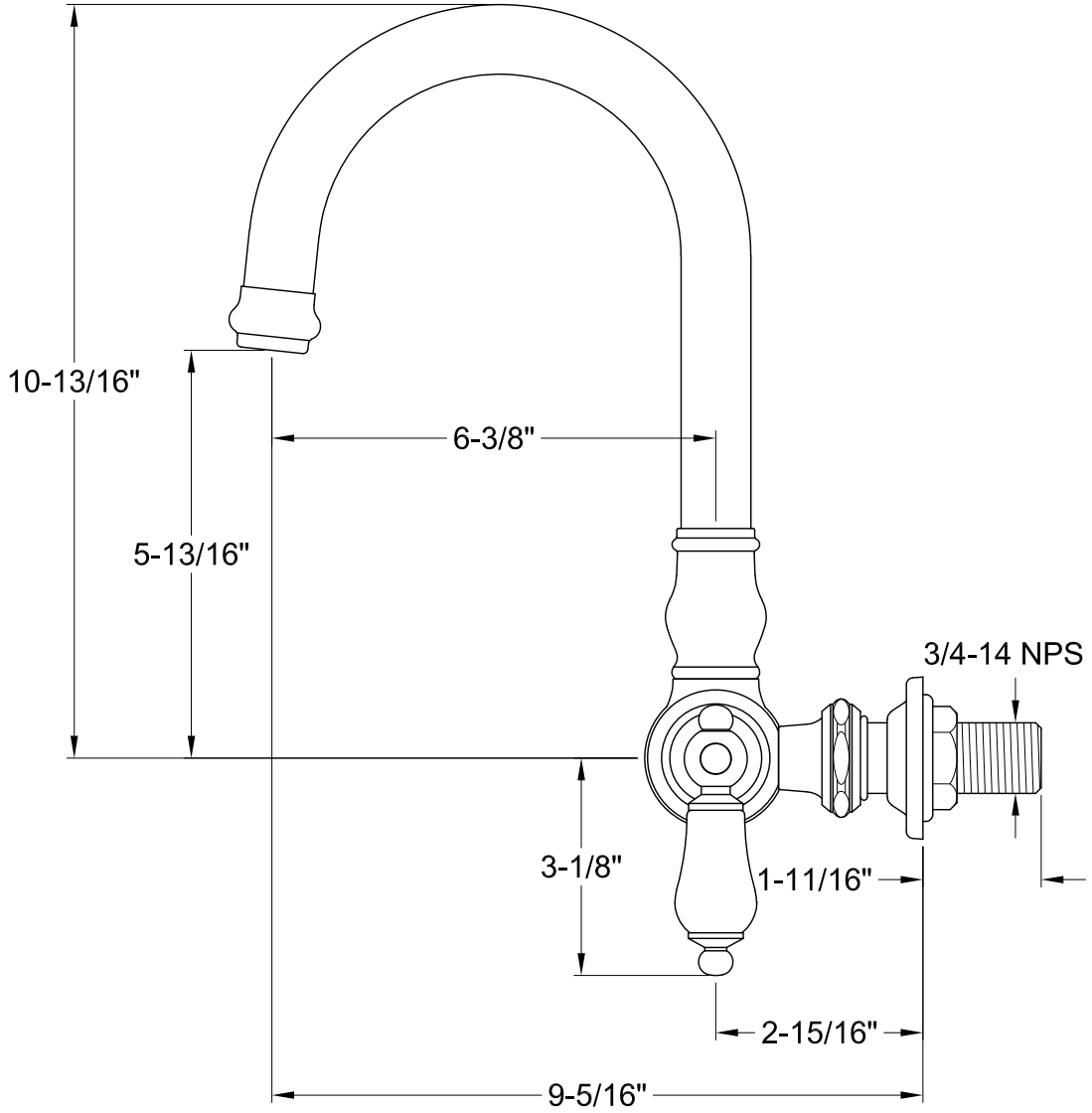

Ref# CC3004T1,CC3003T2,5,8 | 2019-01-A