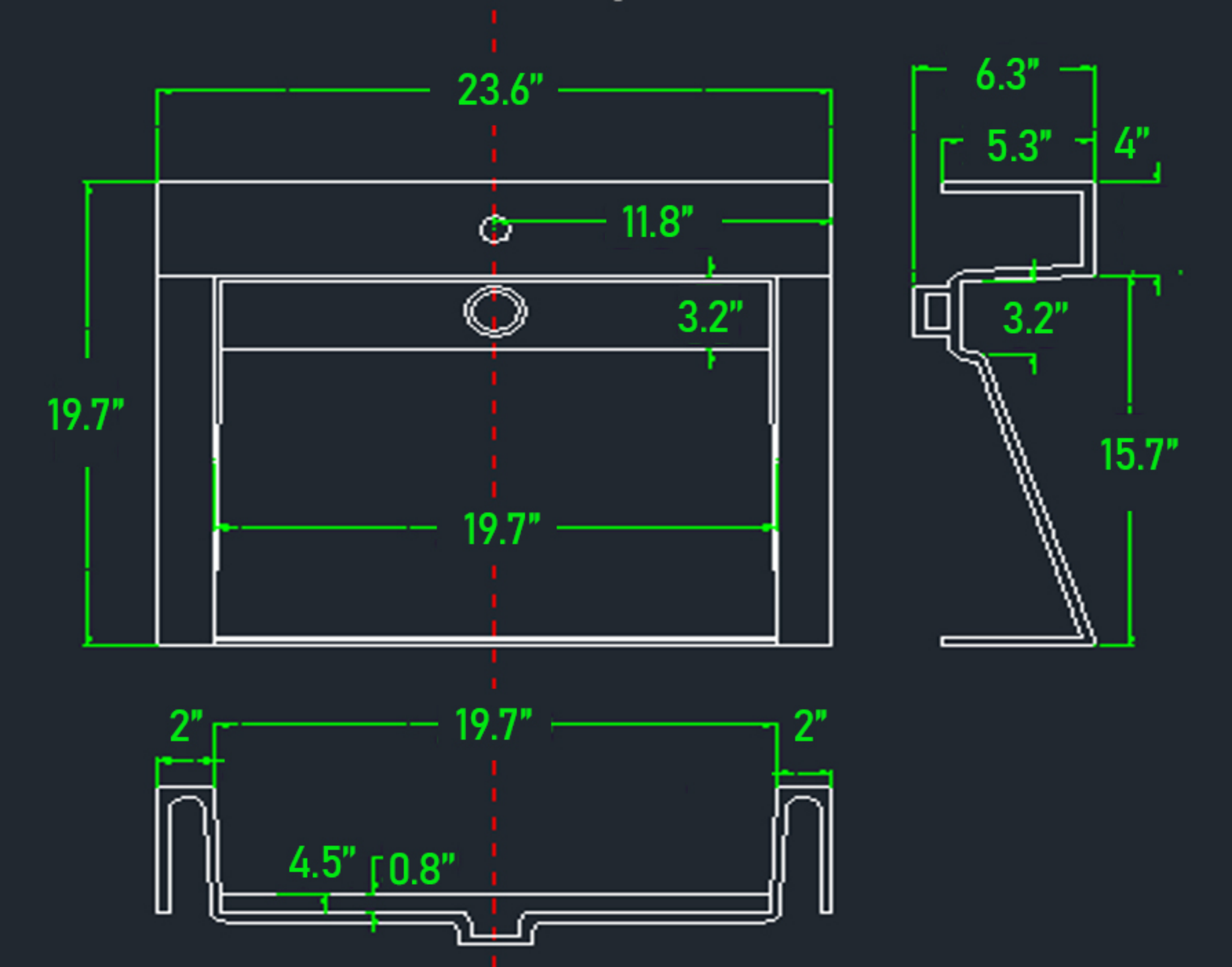
23.6"
11.8"
3.2"
19.7"
19.7"
6.3"
5.3"
4"
3.2"
15.7"
2"
19.7"
2"
4.5"
0.8"