KB5601,2,5,8,9FL
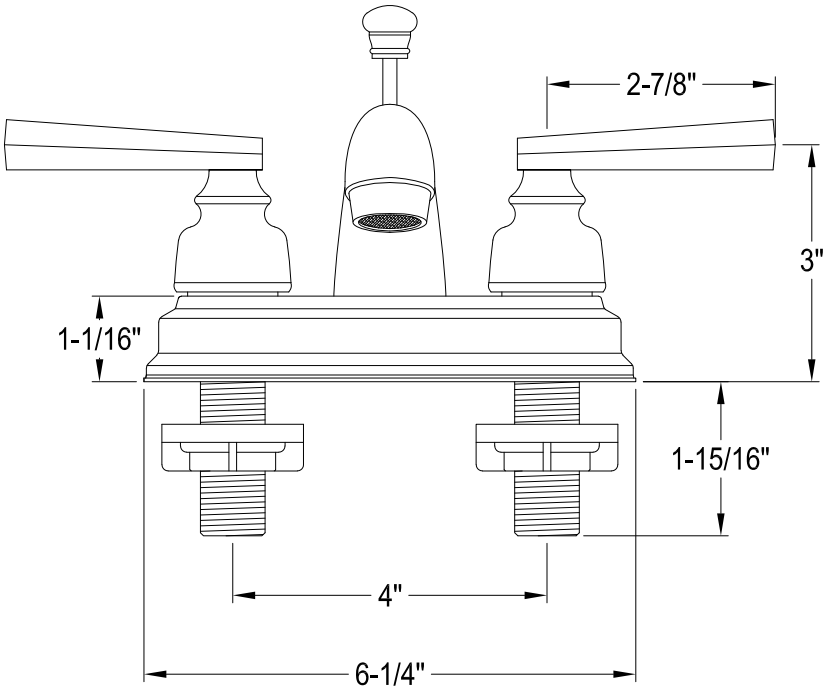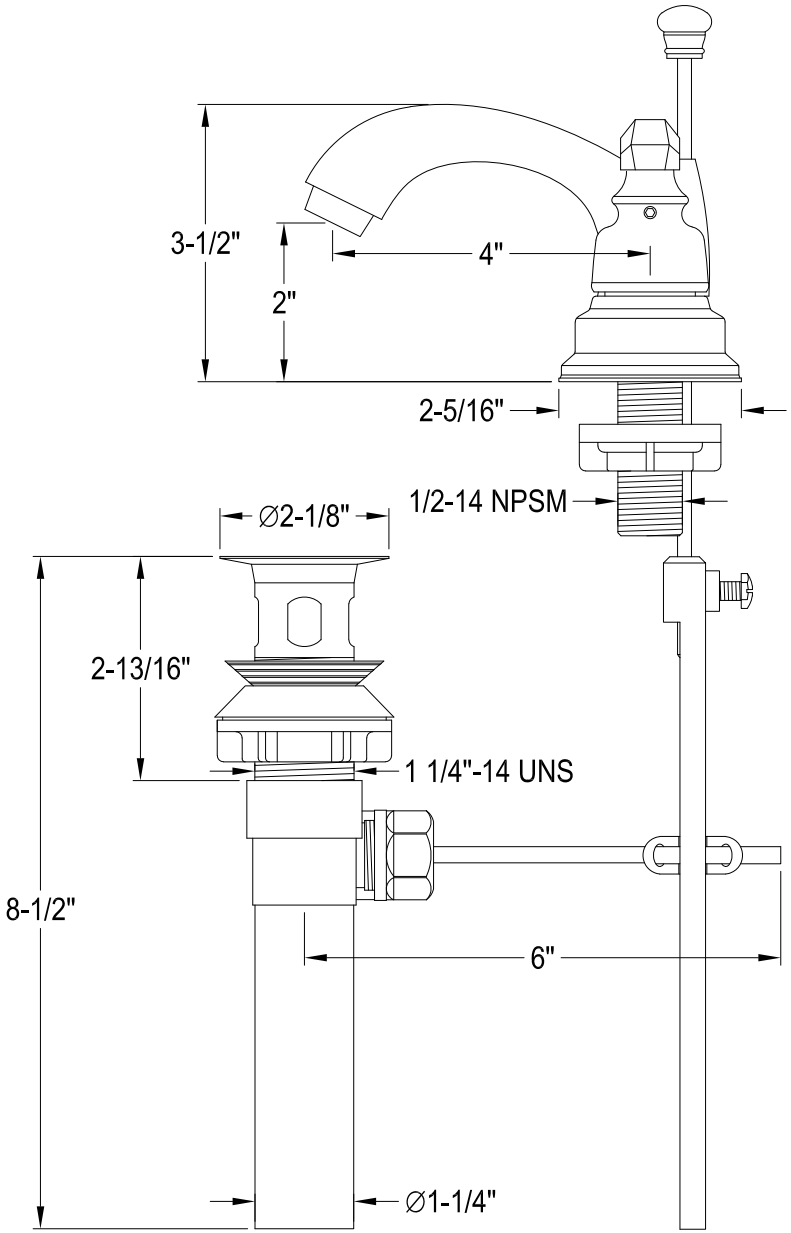
Twin Handles 4" Centerset Lavatory Faucet With Retail Pop-Up