ABTPN88 | Polished or Brushed Stainless Steel Recessed Toilet Paper Holder Niche

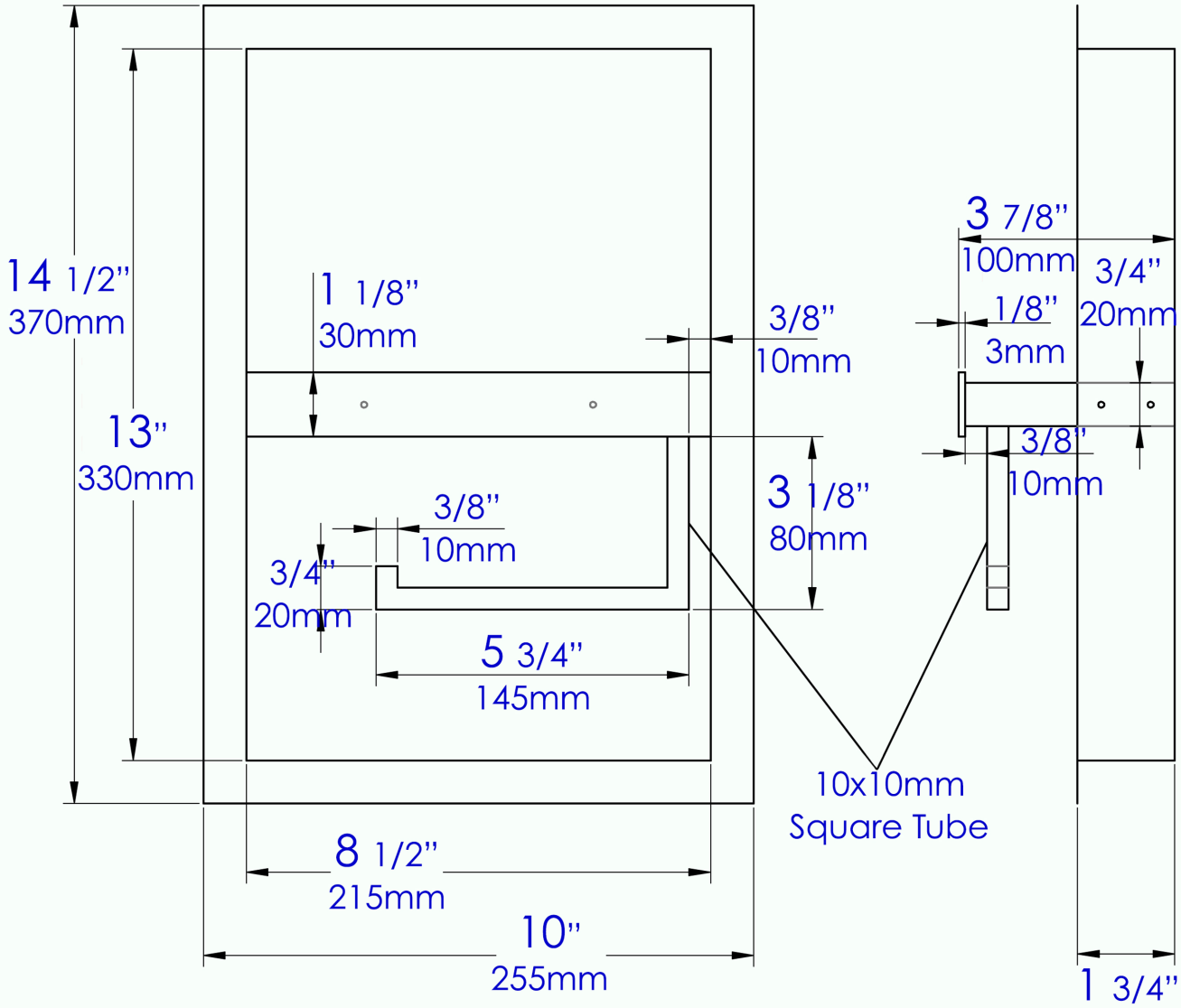

Note: All product dimensions are approximate and should be verified on site prior to installation.
Visit **www.ALFIbrand.com** for more information.

®2023 ALFI brand™ All Rights Reserved. This material may not be reproduced, displayed, modified or distributed without the express prior written permission of the copyright holder.