# KB1791,2,3,5,6,8,9ALLS
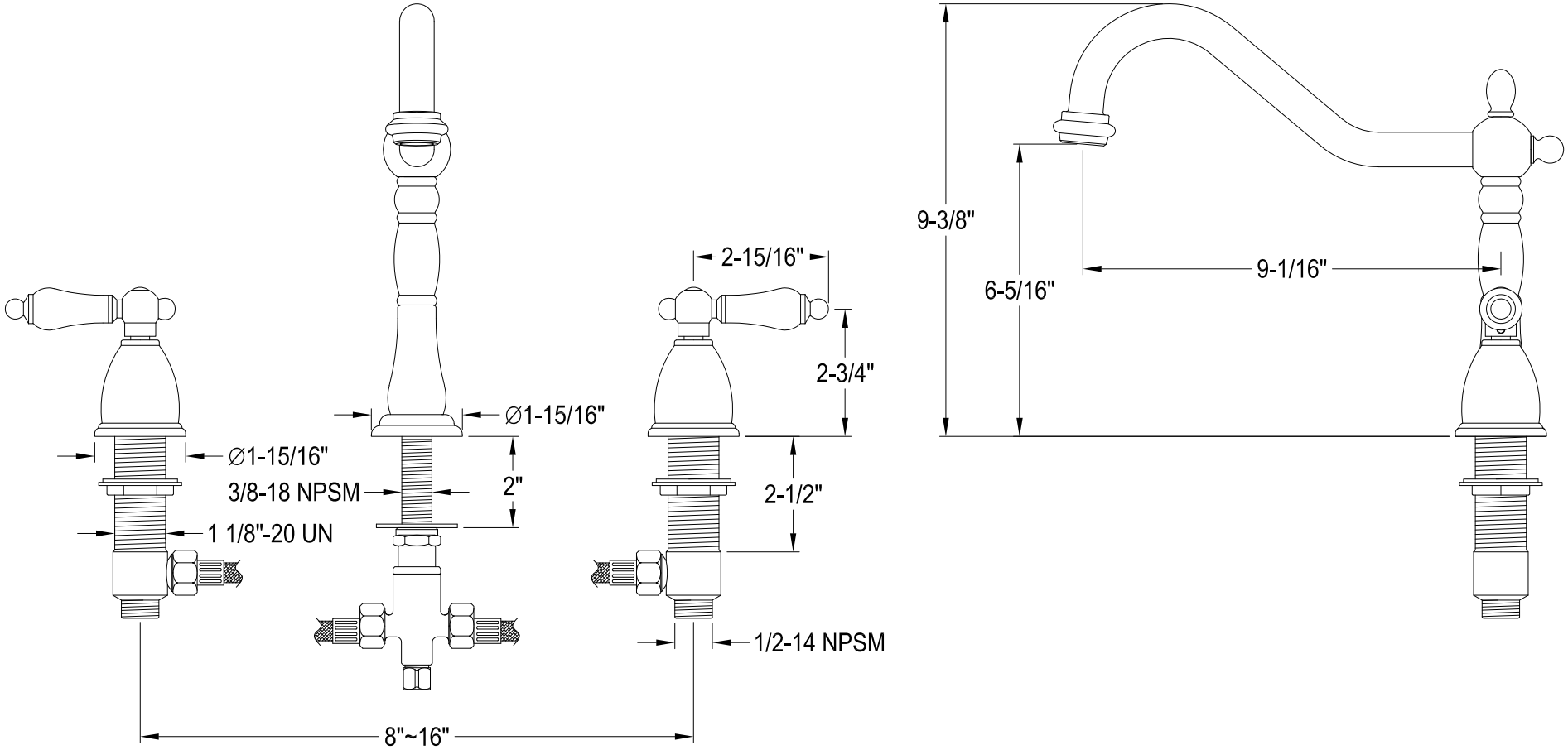
Widespread Kitchen Faucet