TOB4215

ASSEMBLY & INSTALLATION GUIDE

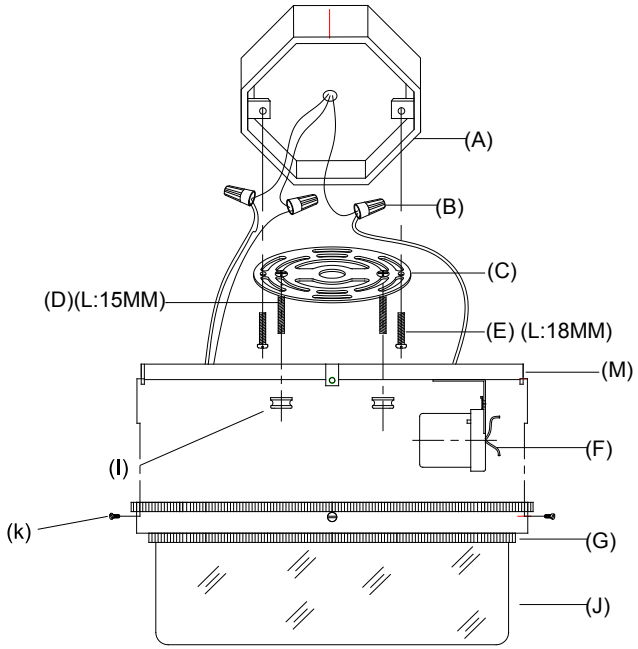

WE RECOMMEND INSTALLATION OF THIS LIGHTING FIXTURE BE DONE BY A LICENSED ELECTRICIAN.

WARNING * SWITCH OFF THE MAIN ELECTRICAL SUPPLY FROM THE MAIN FUSE BOX/CIRCUIT BREAKER BEFORE INSTALLATION.**

INSPECT ITEM CAREFULLY BEFORE ATTEMPTING TO INSTALL. IF THERE IS ANY DAMAGE OR OBVIOUS DEFECT, DO NOT INSTALL.

ITEM MAY NOT BE RETURNED ONCE IT HAS BEEN INSTALLED.

---

1. Connect the hot wire from the fixture (BLACK) to the hot wire from ceiling outlet box (A) (usually BLACK). Fasten them together with a plastic wire connector (B) provided and wrap connection with electrical tape.
2. Repeat this procedure for the WHITE neutral wire from the light fixture to the wire from ceiling outlet box (A) (usually WHITE). Connect ground wire from the light fixture (GREEN or bare copper) to ground wire from ceiling outlet box (A) (usually green or copper in color).
3. Remove mounting plate (C) from fixture base (G) by unscrewing nuts (I).
4. Affix the mounting plate (C) onto ceiling outlet box (A) and secure with mounting screws (E).
5. Attach fixture base (M) to affixed mounting plate (C), letting rods (D) on mounting plate (C) pass through the holes on fixture base (G), and secure with nuts (I).
6. Put the glass shade (J) into the fixture and use clip to locking it tight.
7. Insert light bulbs (not included) into sockets (F).
8. Put the fixture (G) to fixture base (M) and secure with screws (K).
9. Restore power to outlet box and test fixture.
10. Installation is complete.