KB2631,2,5,8DFL
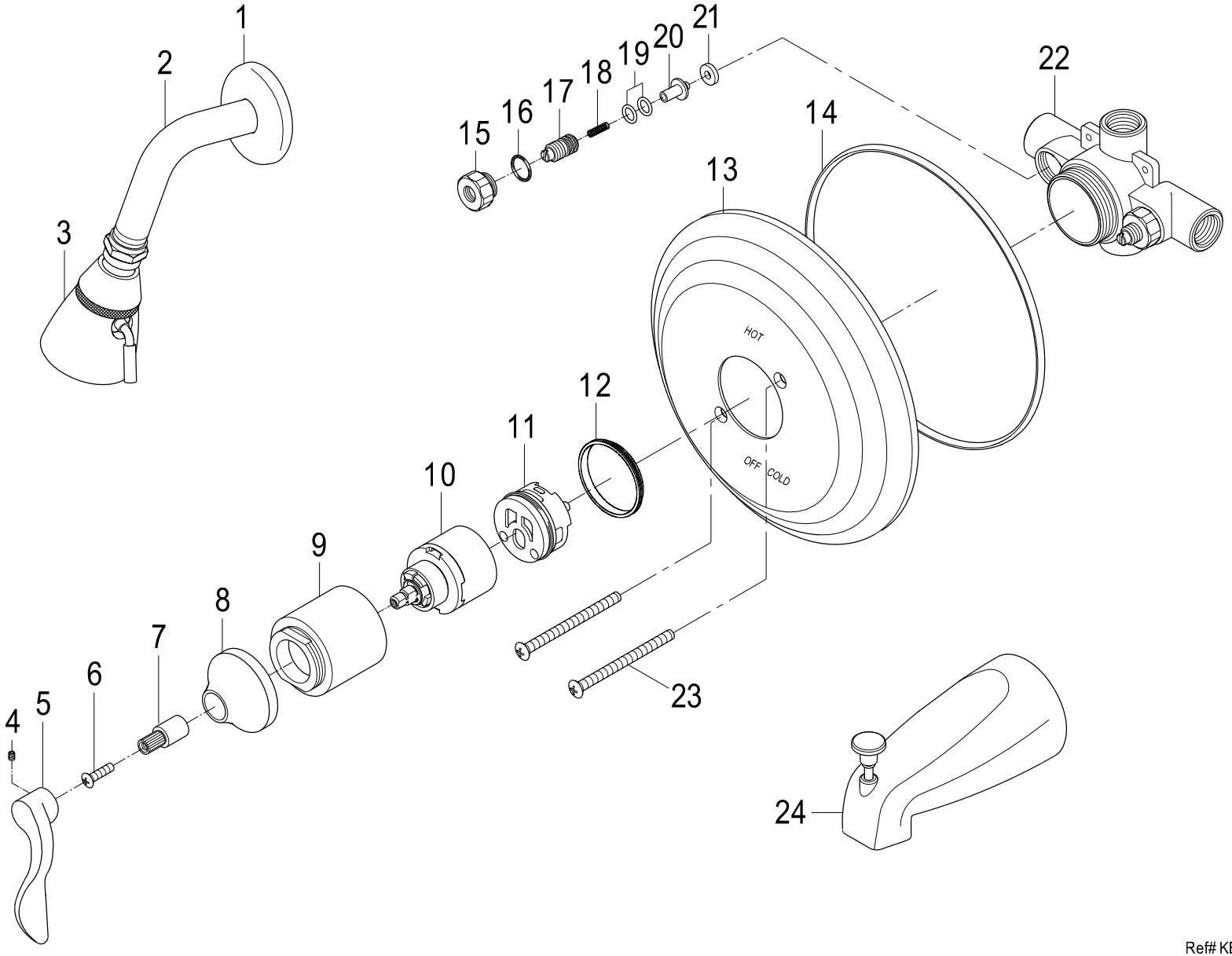
Single Handle Pressure Balanced Tub & Shower Faucet