LED Linear High Bay

JONATHAN Y

INSTRUCTION MANUAL

ITEM#: JYL9800A

Please read instruction before commencing installation and retain for future references.Electrical products can cause death or injury, or damage to property. If in any doubt about the installation or use of this product, consult a competent electrician.

Part No.	Power	Input Current	Input Voltage	Frequecy	PF	THD	Luminous Flux	CCT	Ra	Life Span	Warranty
TS-FHB1-80W	80W	0.734A	AC120-277V AC120-347V	50/60Hz	>0.9	<20%	10400lm	4000K 5000K 5700K	80	50,000h	5 years
TS-FHB1-110W	110W	1.009A					14300lm				
TS-FHB2-165W	165W	1.513A					21450lm				
TS-FHB3-220W	220W	2.017A					28600lm				
TS-FHB5-225W	225W	2.063A					29250lm				
TS-FHB5-300W	300W	2.750A					39000lm				
TS-FHB2-165W	165W	0.524A	AC347-480V				21450lm				
TS-FHB5-225W	225W	0.714A					29250lm				
TS-FHB5-300W	300W	0.951A					39000lm				

Chain Installation

1.Hook the chain as below pic.

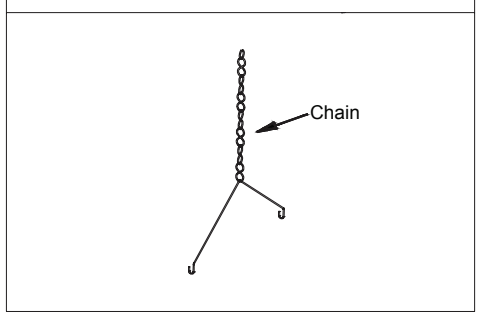

2. Insert the hook into the slotted holes, as shown below.

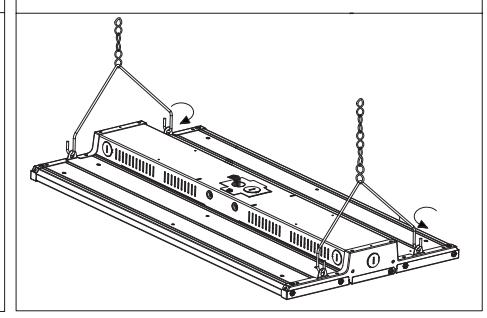

3.Hook up the chain on the ceiling anchor.

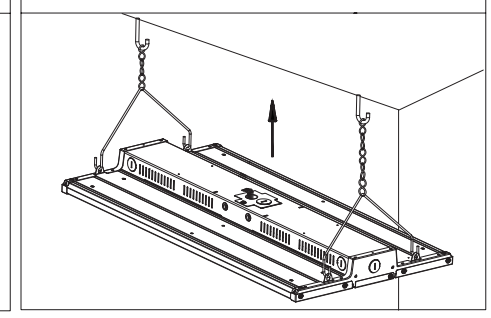

4.Turn off power,and make wiring connections with terminal cap(see wiring instrucion below).

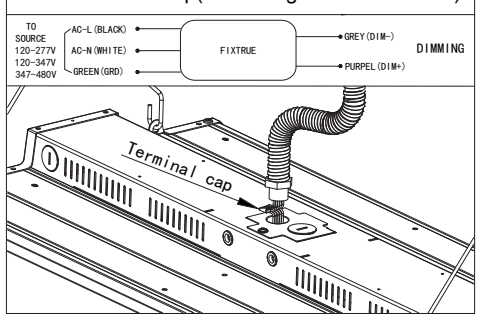

5.Insert the terminal cap and wires into the driver box.

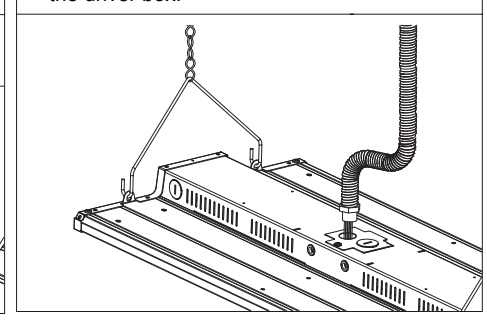

6.Insert the wire terminal joint to the wire entry. Installation completed.

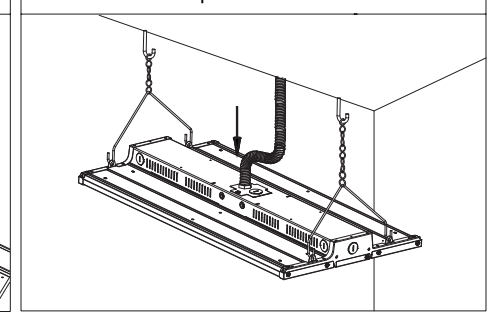

Note:
1.The installation and maintenance must be completed by electricians or professionals.
2.Please cut off the power before installation and maintenance.
3.The thermally insulating material is not allowed to cover the fixture.
4.Please keep away from the corrosive substance, and keep the fixture dry and clean.
5.Working temperature: -4°F~122°F, storage temperature: -22°F~140°F.

The Installation must be carried out by a qualified electrician.