ASSEMBLING & INSTALLATION INSTRUCTIONS PRODUCT#4171 4174

WARNING! SHUT POWER OFF AT FUSE OR CIRCUIT BREAKER .

ASSEMBLING THE FIXTURE (Fig.2).

1. Return the arms to suitable position, see figure.2.
2. Attach the loop (A) to the top center pipe nipple of the fixture body (B) by turning it clockwise until tight.
3. Raise the cover (F) to bottom the plate of the fixture body (B) and lock it securely with ball nut (E).
4. Put the socket sleeve (C) onto the socket (D).
5. Install the light bulbs in accordance with the fixture specifications **NOTE: DO NOT EXCEED THE SPECIFIED WATTAGE!**

HANGING THE FIXTURE (Fig.1)

1. Shut off the power at the circuit breaker and remove old fixture from ceiling, including the old single bar.
2. Carefully unpack new fixture and lay all the parts on a clear surface.
3. Thread nipple (C) into loop (F) until snug.
4. Thread other end of nipple (C) with loop attached into single bar (D) until snug.
5. Place lock washer (B) over end of nipple protruding through single bar and thread hex nut (A) onto nipple until tight.
6. Take this single bar assembly and mount to ceiling junction box with junction box screws (E). Tighten screws securely with screwdriver.
7. Using proper chain pliers to open one end link of the chain provided and connect to the fixture loop (I). Close the link.
8. By measuring, determine correct number of links needed for proper hanging height. Using proper chain pliers disconnect and discard remaining chain.
9. Lace the fixture wires through the chain.
10. Slip loop collar (H) over the chain, then do the same with the canopy (G).
11. Open the other end link of the chain and hang the fixture on the loop at the ceiling. Close the link.
12. Feed the fixture wires through the loop (F) and nipple (C) and pull until taut.
13. Slide canopy (G) up flush to ceiling, secure using loop (H).

CONNECTING THE WIRES (Fig.3)

1. Take the black wire from the ceiling junction box and the smooth wire leg from the fixture and twist bare ends together. Twist wire connector onto end of wire until snug.
2. Repeat same process with white junction box wire and ribbed wire leg of fixture wire. NOTE: Twist wires together in the same direction you twist the wire connector onto wires.
3. If your junction box has a grounding wire (green or bare copper), attach this wire and the bare copper wire from the fixture together as step 1.If junction box has no ground wire, attach the bare copper fixture wire to the green ground screw on the single bar.
4. Tuck these wire connections neatly into the ceiling outlet box and then raise the canopy (G) all the way to the ceiling. Raise the loop (H) and thread onto ceiling loop protruding through canopy

Your installation is now complete. Return power to the junction box and test the fixture.

Fig.1

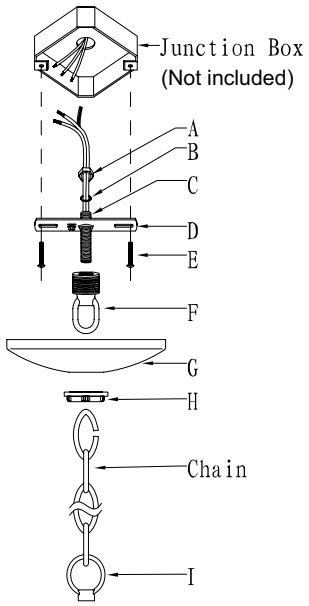

Fig.2

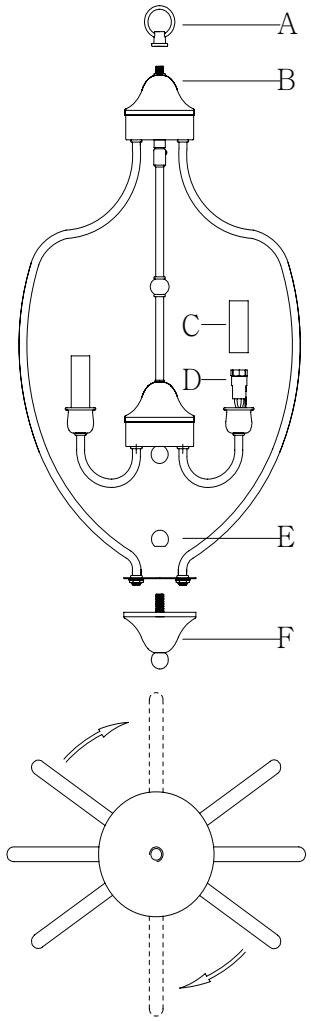

Fig.3

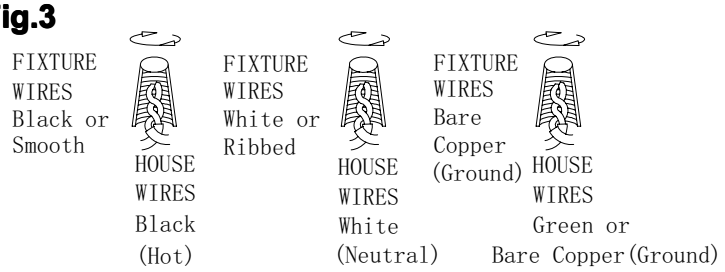

LIVEX LIGHTING EST. 1993

DOC20141204171