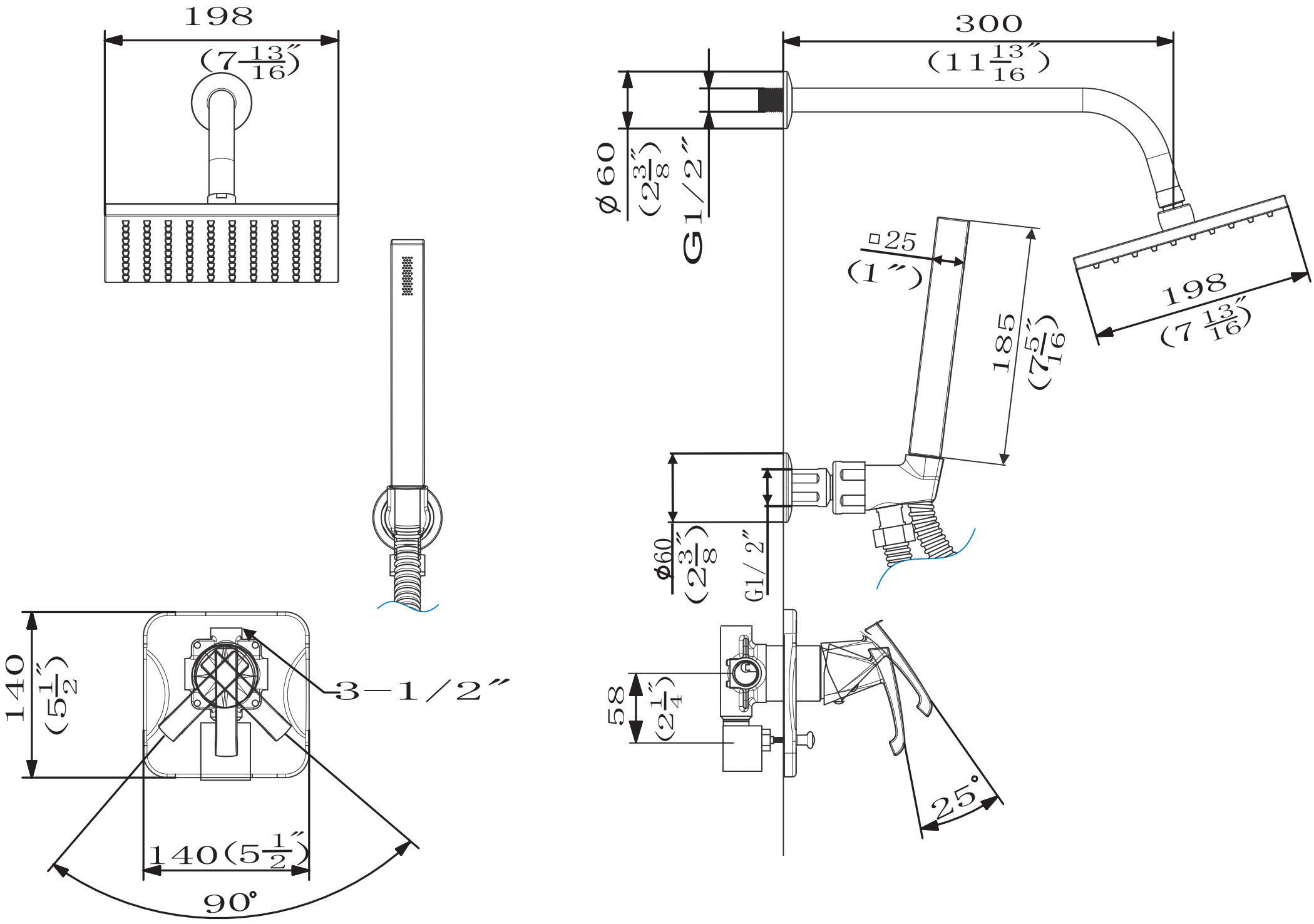
198
(7 13/16″)
300
(11 13/16″)
ø60
(2 3/8″)
G1/2″
□25
(1″)
185
(7 5/16″)
198
(7 13/16″)
ø60
(2 3/8″)
G1/2″
58
(2 1/4″)
25°
140
(5 1/2″)
3—1/2″
140(5 1/2″)
90°