Escape ESTO6042SKTF 60" x 42" x 22"

TUB ONLY SERIES

Hydro Massage
Your Health ... Our Passion

PRODUCT NUMBER: ESTO6042SKTF-LH & ESTO6042SKTF-RH

TECHNICAL SPECIFICATIONS	
Drain	End drain
Pump Configuration: Select 1	Std. = Standard / Alt LF/RF Optional
Bath Weight (empty)	175 lbs
Gallons to Operate	50-68
ELECTRICAL SPECIFICATIONS	
Motor/Pump	N/A
Inline Stainless Steel Heater	N/A

BATHERS: 1	
INSTALLATION	
	DECK (D)
	UNDER MOUNT (U)
•	ALCOVE (A)
	FREESTANDING (F)
	CLAWFOOT (L)
	PEDESTAL (P)

Integral Skirt w/ velcro access panel and tile flange

STANDARD FEATURES & ACCESSORIES for TUB ONLY SERIES

STANDARD ACCESSORIES
Adjustable Leveling Legs
Integral Tile Flange

REQUIREMENTS
Tub should not be supported by the lip in any way. Level tub & screw or glue EZ Level adjustable legs to sub floor.
CUT OUT DIMENSIONS:
OVALS: A template will be provided
RECTANGLES: Subtract 1" to 1.5" from length & width for hole cut out size

EZ CLEAN CAST ACRYLIC LIMITED LIFETIME WARRANTY

c UL us **ANSI**

OPTIONAL FEATURES & ACCESSORIES
(Please type in the box below)

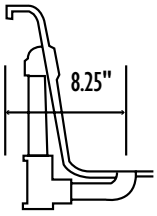

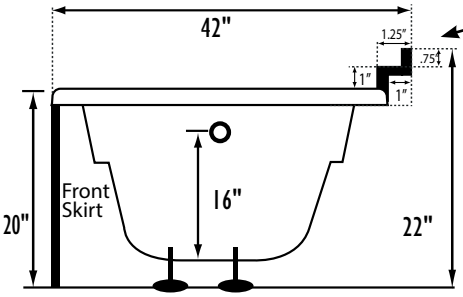

Bath includes EZ Level Legs

EZ Clean Tile Flange

radius corner lip profile

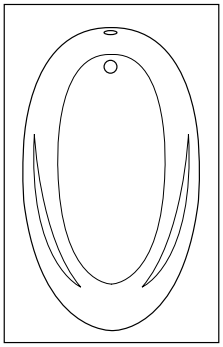

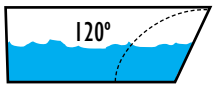

Backrest angle

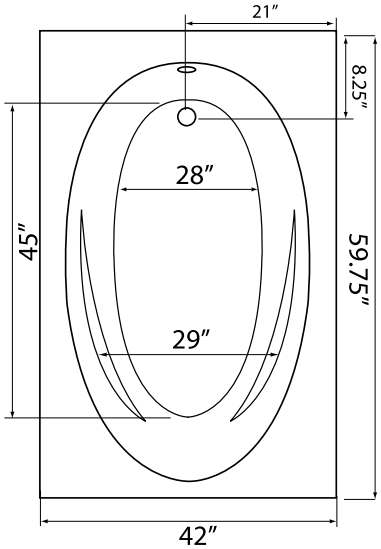

Some standard & most alternate pump locations may stickout past perimeter of the bath 1"-3". NOTE: Graphics may not be to scale. Specifications and features are subject to change without notice and are ± .25". All final measurements should be taken from tub on site. Access 18"x 18" or larger is required for each pump. Consult your contractor for installation requirements.

Hydromassage Products LLC • 303-341-1845 | FAX: 303-341-1850 • www.hydromassageproducts.com