CC92T1,CC91T2,5,8
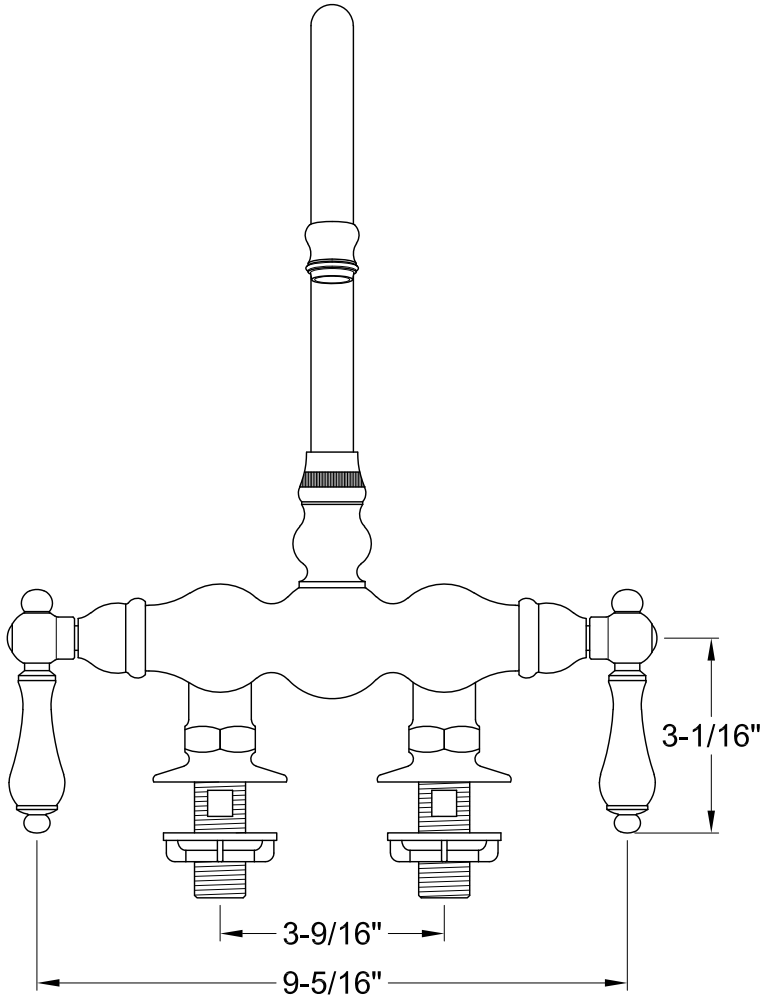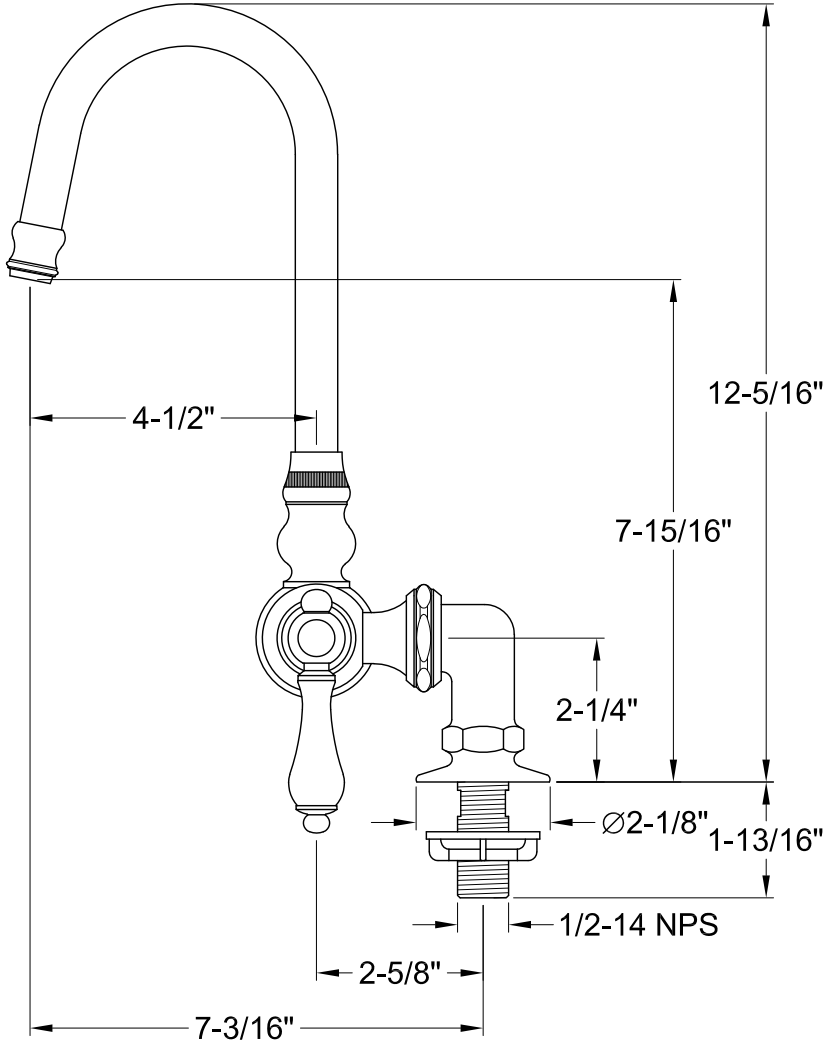
Deck Mount Tub Filler