43″ RECTANGLE SINK THIN COUNTERTOP

ARIEL

OVERALL DIMENSIONS

43″ W x 22″ D x 1.5″ H

COUNTERTOP OPTIONS

Carrara Marble
CW-043S-REC-CT

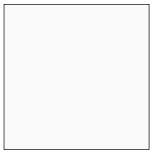

White Quartz
WQ-043S-REC-CT

FEATURES

- Solid countertop with mitered edges & seams
- Undermount white rectangular sink
- Pre-drilled for 8” widespread faucet

INCLUDED

- Countertop
- Matching Backsplash
- Sink

COUNTERTOP PLAN VIEW

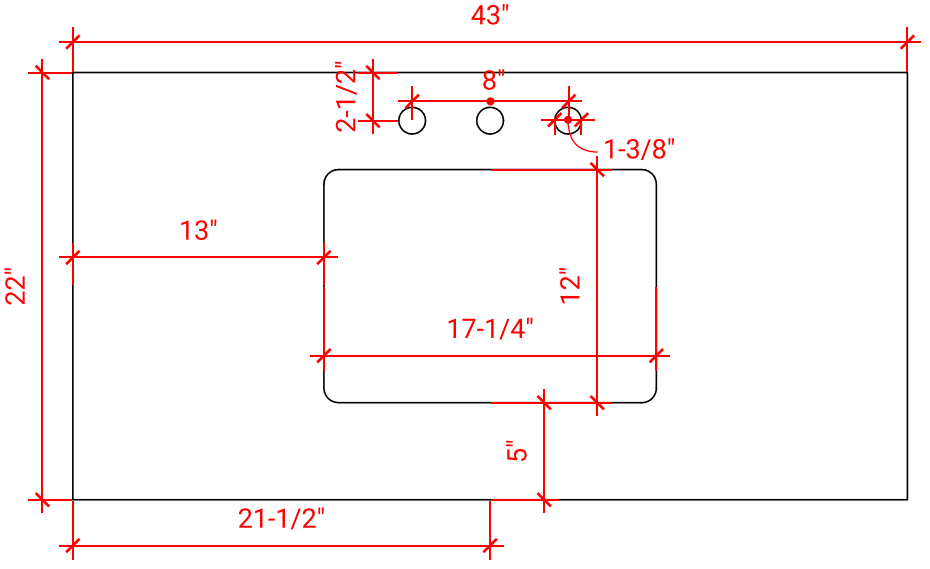

EDGE SIDE VIEW

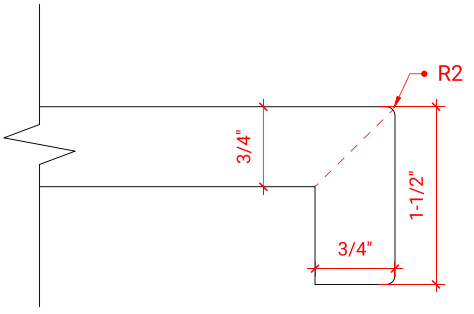
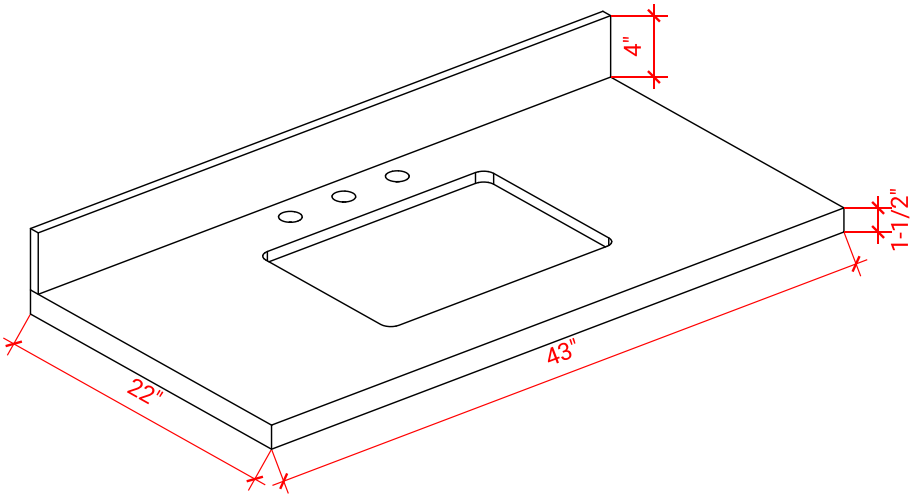
THREE DIMENSIONAL COUNTERTOP VIEW