Vinnova Funes Vanity Collection 702572-BG-WK

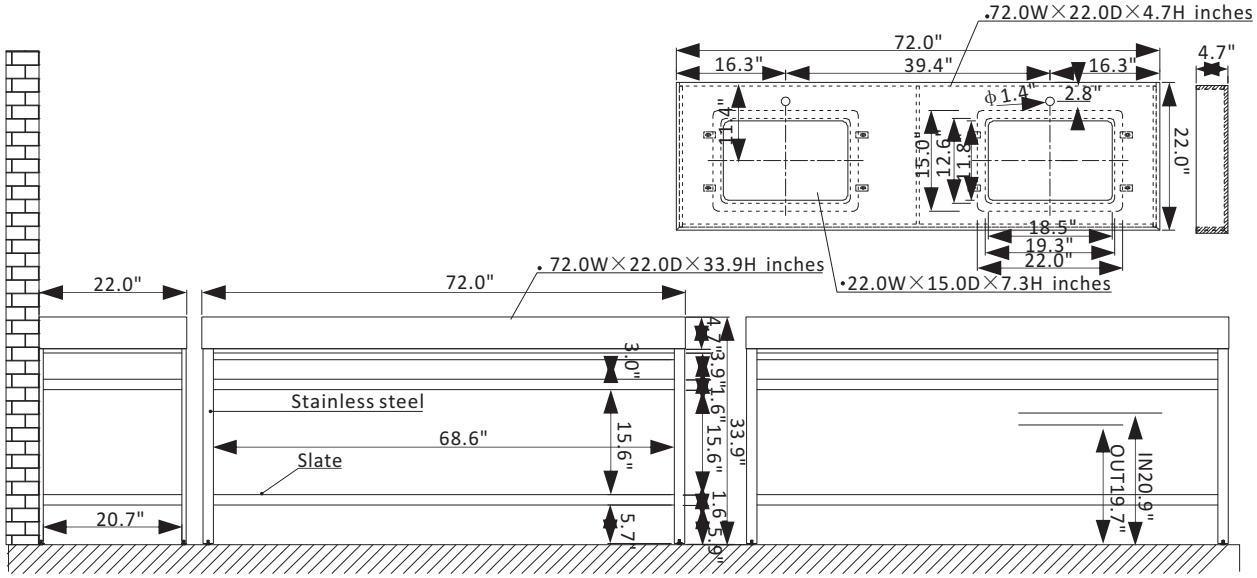

Features

Constructed of high-quality stainless steel with sintered stone for superior durability and stability.
Structure base available in Brushed Gold or Matte Black finish to enhance your décor.
Your choice of White or Gray countertop lends a touch of refined opulence.
Large open shelf below provides convenient space for storage or display.
Double, rectangular glazed white ceramic under-mount sinks included.
Single, rectangular LED mirror with aluminum frame coordinates perfectly with vanity.
Pre-drilled and designed for easy plumbing and faucet installation.

** Does not include back-splash, faucet, drain assembly, or P-trap.*

VINNOVA
FASHION BATHROOM LIFE