SOLEA®

Dual Handle Lavatory Faucet
BRF1052C

Features

- Hybrid Waterway Design
- Fits Standard 4” Centers
- Use with or without Pop-up (Not Included)
- Max Flow Rate 1.5GPM(5.7LPM) at 60 PSI(ASME.A112.18.1M)
- Ideal for vessel sink applications
- Coordinates with Composed faucets, accessories, and showering components to complete your bathroom
- Faucet Net Weight: approx 1.57KG

Material

- Brass Spout And Zinc Handles, Stainless Steel Deckplate.
- SOLEA® finishes resist corrosion and tarnish.

Installation

- 3 holes mounting.
- Metal shank simplify installation.

NSF/ANSI 372

Codes/Standards

ASME A112.18.1/CSA B125.1
ICC/ANSI A117.1
NSF/ANSI 61

All applicable US Federal and State material regulations

SOLEA® Faucet Lifetime Limited Warranty

See website for detailed warranty information.

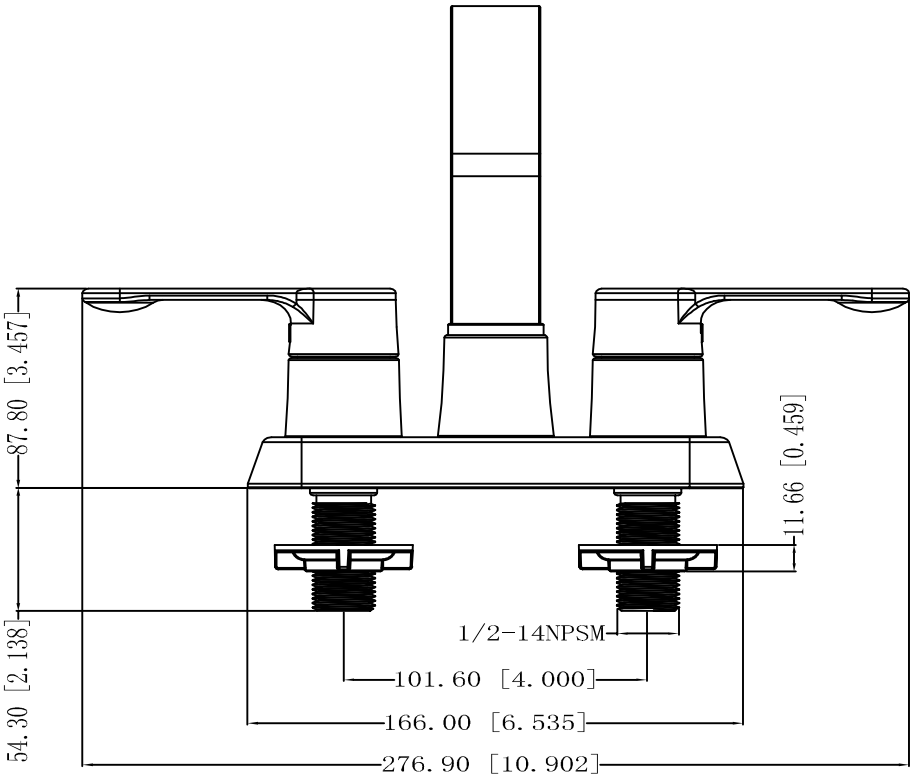

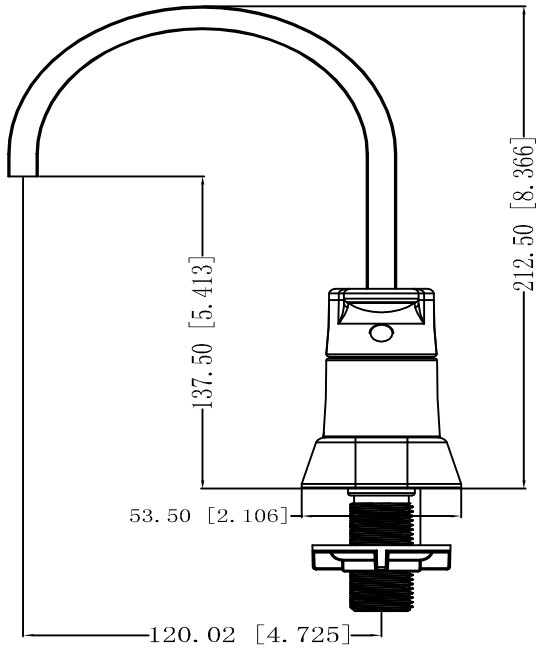

SOLEA IS A REGISTERED TRADEMARK OF SAFAVIEH INTL LLC
FOR HELP WITH THIS PRODUCT, PLEASE GO TO SAFAVIEH.COM / CONTACT
40 HARBOR PARK DRIVE NORTH, PORT WASHINGTON, NY11050