SEACHROME

Seachrome Corporation
1906 East Dominguez Street
Long Beach, California 90810
Phone: (800) 955-2476
Fax: (800) 444-3380

Description:

IGW-4130-Q-SS
Swing-Up Grab Bar
(Satin Stainless Finish)

Customer:

Customer Part #

11-10-2015

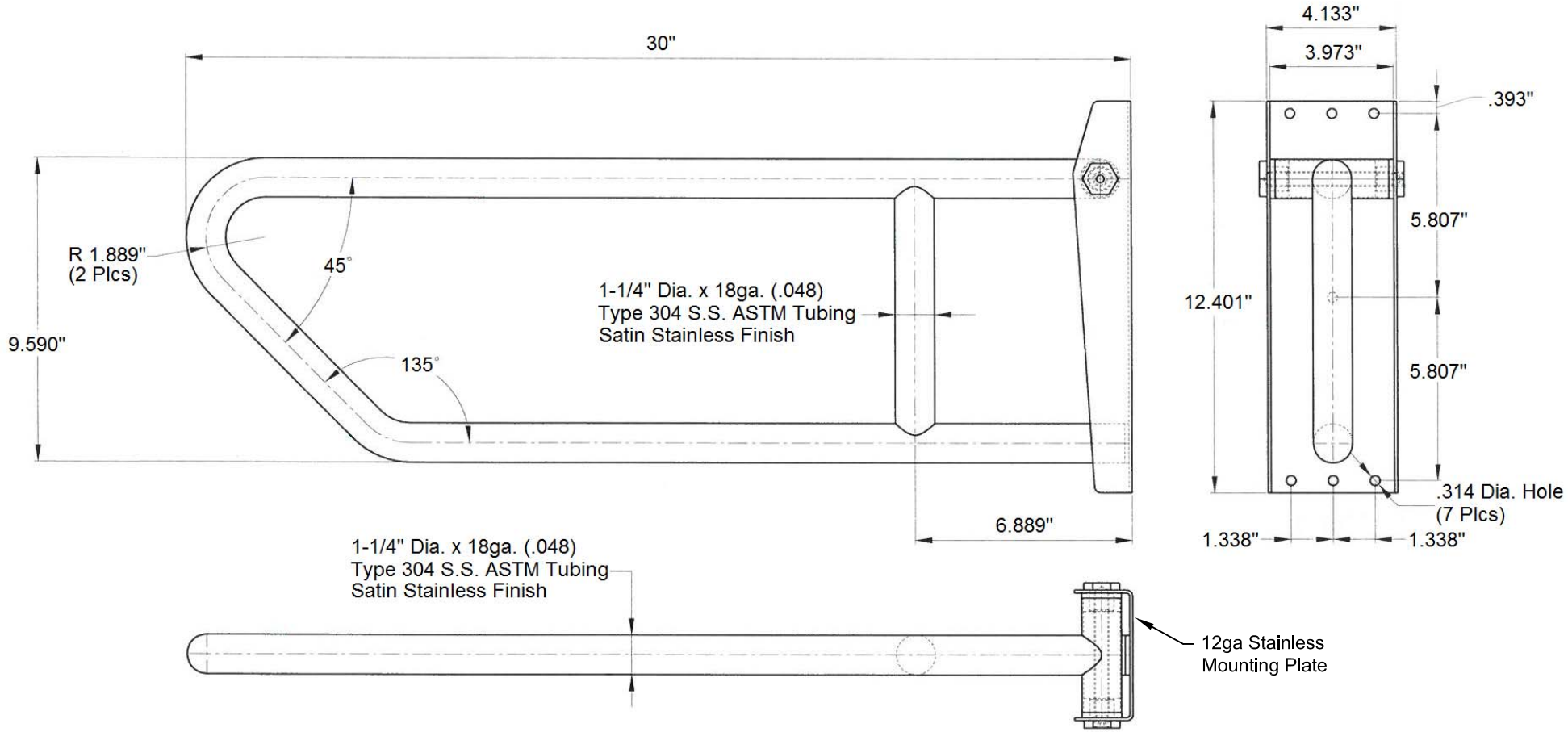

This drawing and the information contained herein is proprietary to Seachrome Corp. and shall not be reproduced, copied or disclosed in whole, or part, or used for manufacturing or for any other purpose without the written permission of Seachrome Corporation.