Zen AS6032SKTF 60” x 32” x 23”

AIR SILVER SERIES

Hydro Massage
Your Health ... Our Passion

PRODUCT NUMBER: ZEAS6032SKTF-LH & ZEAS6032SKTF-RH

TECHNICAL SPECIFICATIONS	
Drain	End drain
Pump Location(s): Select 1	Std. = Standard / Alt LF/RF Optional
Bath Weight (empty)	165 lbs
Gallons to Operate	38-56
ELECTRICAL SPECIFICATIONS	
Motor/Pump	(1) 115v 20AMP GFCI Circuits

BATHERS: 1	
INSTALLATION	
	DECK (D)
	UNDER MOUNT (U)
•	ALCOVE (A)
	FREESTANDING (F)
	CLAWFOOT (L)
	PEDESTAL (P)

Jet & Control placement may vary

Integral Skirt w magnetic access panel

STANDARD FEATURES & ACCESSORIES for AIR SILVER SERIES BATHS _____

JETS
12 Classic Air Jets Sidewall ◯

PUMPS
1.0 Air Power 3-Speed Warm Air Pump
Quiet Pad Anti-Vibration Mounted Pump

CONTROLS
Air Switch On/Off Control(s)
Automatic Purge & Dry Cycle Control

PURITY
HydroCleanse

STANDARD ACCESSORIES
EZ Level Adjustable Legs
FDA Recipe Non-Toxic Food & Beverage Grade Plumbing (primarily)
30 Point Quality Assurance Factory Test
Adjustable Leveling legs
Integral Skirt with Magnetic Access Panel

REQUIREMENTS
Pump Locations: Select 1
Electrical: one 115v GFCI Circuit
Tub should not be supported by the lip in any way. Level tub & screw or glue adjustable legs to sub floor.
CUT OUT DIMENSIONS:
OVALS: A template will be provided
RECTANGLES: Subtract 1” to 1.5” from length & width for hole cut out size

EZ CLEAN CAST ACRYLIC LIMITED LIFETIME WARRANTY c UL us **ANSI**

OPTIONAL FEATURES & ACCESSORIES
(Please type in the box below)

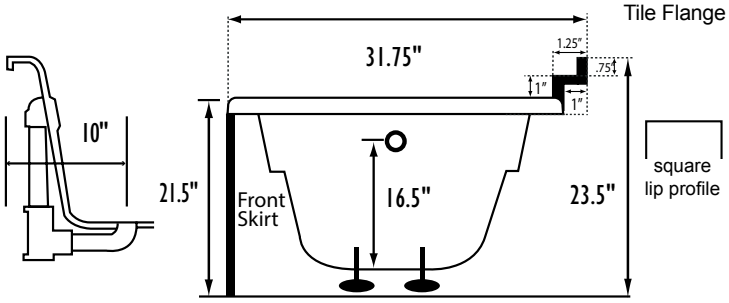

Bath includes EZ Level Legs
INSTALLATION WILL NOT REQUIRE MORTAR BEDDING

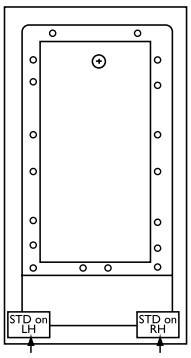

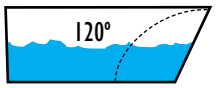

Backrest angle

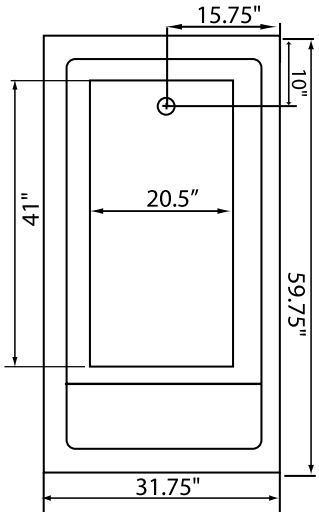

Some standard & most alternate pump locations may stickout past perimeter of the bath 1"-3". NOTE: Graphics may not be to scale. Specifications and features are subject to change without notice and are ± .25”. All final measurements should be taken from tub on site. Access 18”x 18” or larger is required for each pump. Consult your contractor for installation requirements.

Hydromassage Products LLC • 303-341-1845 | FAX: 303-341-1850 • www.hydromassageproducts.com