KGD-442

33 Inch Dual Mount Double Bowl Granite Kitchen Sink

Kraus

SPECIFICATION SHEET

Sink Dimensions
Overall Dimensions: 33" x 22"
Bowl Dimensions: 29 1/2" x 18"
Larger Bowl Depth: 10"
Smaller Bowl Depth: 7 1/2"

Features
- Quartz Composite Construction
- Dual Mount Double Bowl Sink
- 60/40 Split
- Required Minimum Cabinet Size: 36" Left to Right, 24" Front to Back
- Rear Off-Set Drains
- 3 1/2" Drain Openings

Accessories Included
- Mounting Hardware
- Cut-out Template

Available Colors
- Black
- Grey
- Brown
- White

CODES/STANDARDS:
Product Certification
cUPC CSA B45.5/IAPMO Z124

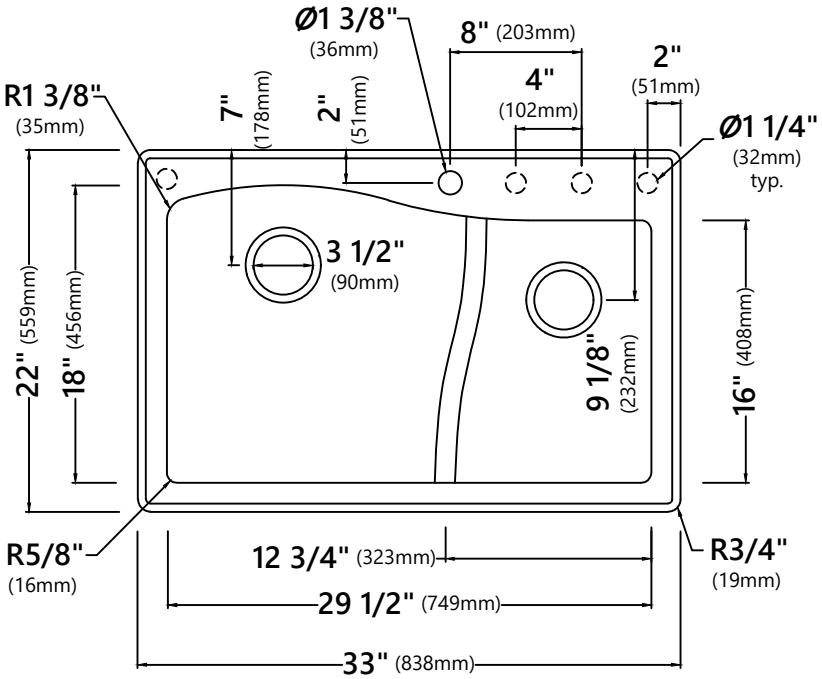

Note: Although Kraus quartz composite sinks are highly heat resistant, placing hot items right from the stove or oven directly into the sink may cause surface discoloration. Consider using a trivet or rolling mat for extremely hot items to avoid potential heat damage.

Warranty
Kraus Limited Lifetime Warranty
see website for details **www.kraususa.com**

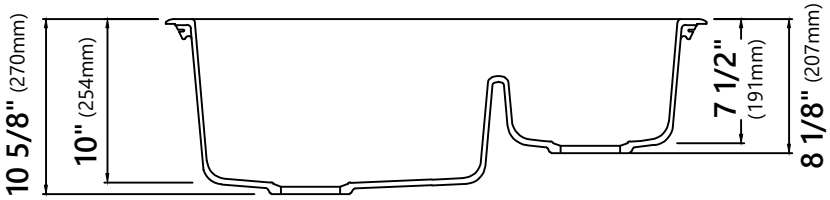

Kraus USA Plumbing LLC Customer Service
1.800.775.0703 | customerservice@kraususa.com

REV. October 7, 2024