Student chair install instruction

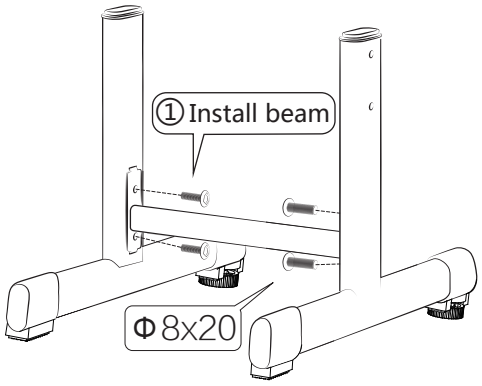

Φ8x20 x8pcs	Φ5x28 x12pcs	1pcs	1pcs

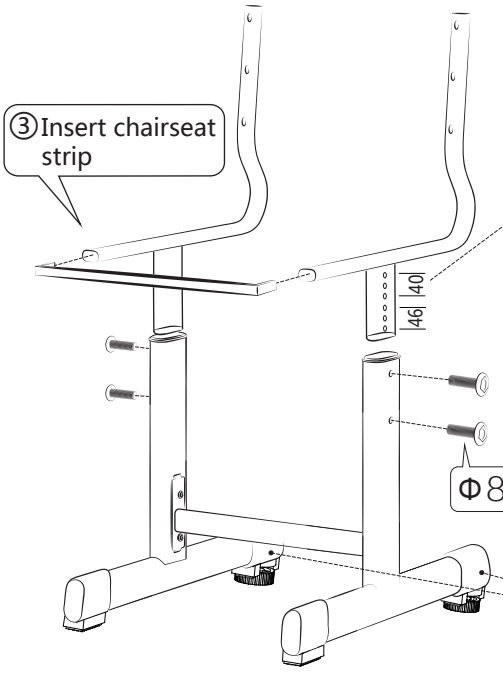

The stand include many hole position, choose different hole thenfix and up to effective of adjusting the chair height

② Install the stand of chairseat according to suitable height

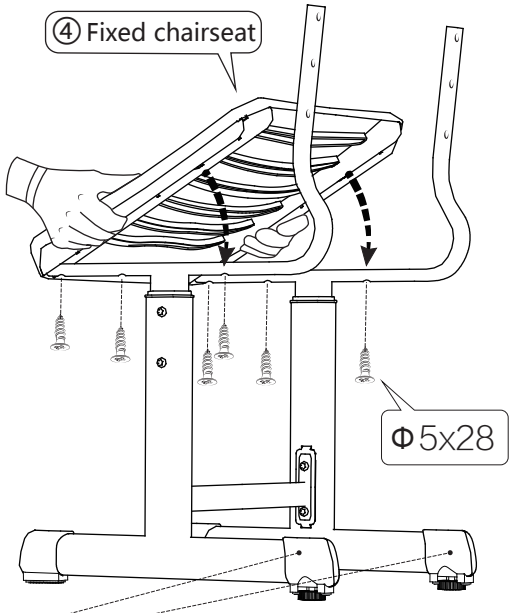

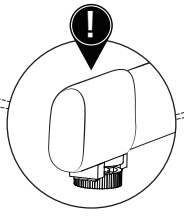

Finish product

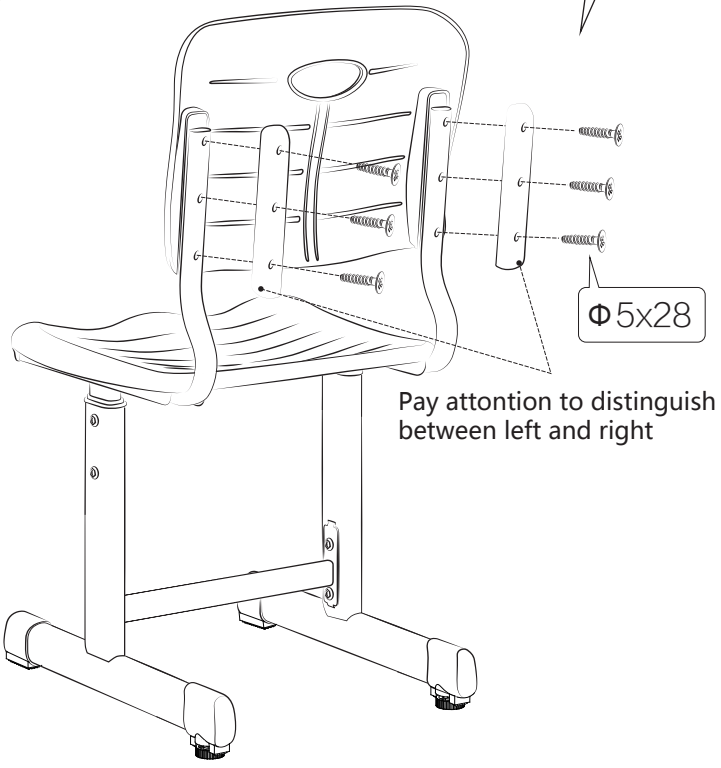

Pay attontion to distinguish between left and right