CLOVIS

BATHTUB
INSTALLATION INSTRUCTION

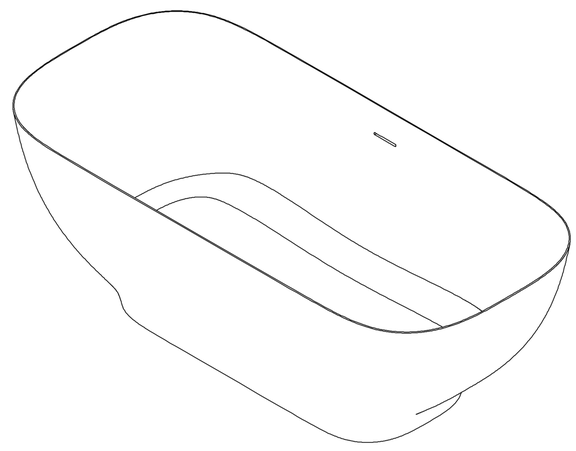

NOTE: Due to the nature of the material,models can differ up to 20mm from the listed dimensions.

PACKING LIST
- Bathtub
- Drain Pipe

NOMINAL DIMENSIONS

MODEL#	BATHTUB SIZE
21S01104-63	63"*30"*22"

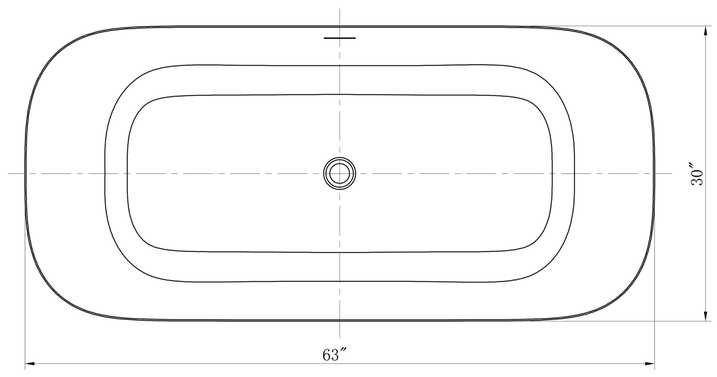

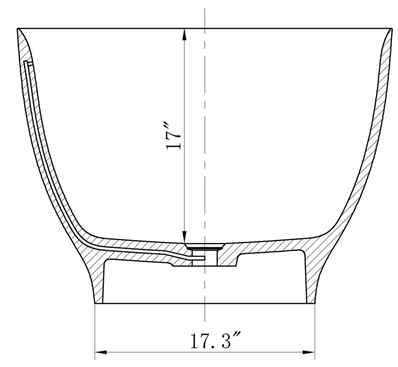

INSTALTION STEP DIAGRAM
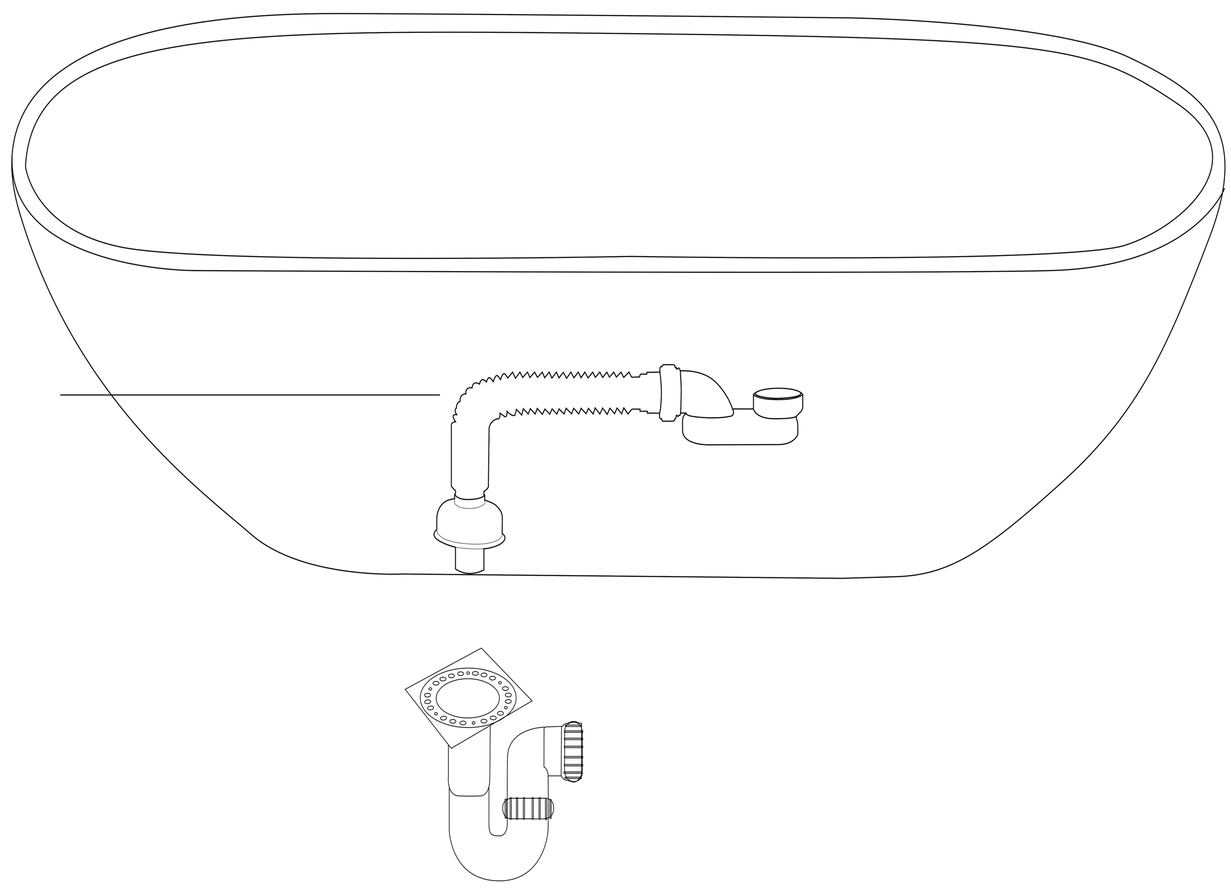
Drain pipe is extendable and adjustable to meet your needs.