COSMO

APPLIANCES

INSPIRING THE WORLD'S KITCHEN

WALL MOUNT RANGE HOOD

COS-63175
COS-63190
COS-63175S
COS-63190S

COS-668A750
COS-668A900
COS-668AS750
COS-668AS900

COS-668WRC75
COS-668WRC90
COS-668WRCS75
COS-668WRCS90

COS-6324EWH

IMPORTANT SAFETY INSTRUCTIONS
Carefully read the following Important information redarding installation safety and maintenance. Keep these instruction for future reference.

INSTALLATION GUIDE & USER MANUAL

Rev. 22.06

THANK YOU FOR YOUR PURCHASE

Thank you for your purchase. We know that you have many brands and products to choose from and we are honored to know that you have decided to take one of our products into your home and hope that you enjoy it.

COSMO appliances are designed according to the strictest safety and performance standard for the North American market. We follow the most advanced manufacturing philosophy. Each appliance leaves the factory after thorough quality inspection and testing. Our distributors and our service partners are ready to answer any questions you may have regarding how to install, use and care for your products. We hope that this manual will help you learn to use the product in the safest and most effective manner.

If you have any questions or concerns, please contact the dealer from whom you purchased it, or contact our Customer Support at:
1-888-784-3108.

STAINLESS STEEL BAFFLE FILTERS

About Your New Filters

Stainless Steel Baffle Filters do not need linings or mesh inside of the filters and are completely constructed out of stainless steel. The stainless steel construction allows them to be used again after being cleaned or going through the dishwasher.

How do Baffle Filters Work?

They function by forcing the grease filled air to quickly and continuously change direction as it passes through the filter. The grease is unable to change direction as fast as the air carrying them, they end up getting caught on the metal blades and then trapped into the filter tray.These filters are both efficient and require less maintenance.

SEE PAGE 16 FOR INSRUCTIONS ON INSTALLATION FILTERS

IMPORTANT SAFETY INSTRUCTIONS

Read all instructions before using this appliance.

Save these instructions for future references

Approved for residential appliances

For residential use only

CAUTION

FOR GENERAL VENTILATING USE ONLY. DO NOT USE TO EXHAUST HAZARDOUS OR EXPLOSIVE MATERIALS OR VAPORS.

CAUTION

To reduce risk of fire and to properly exhaust air, do not vent exhaust air into spaces within walls, ceilings, attics, crawl spaces, or garages.

WARNING

TO REDUCE THE RISK OF FIRE, USE ONLY METAL DUCT WORK. Install this hood in accordance with all requirements specified.

WARNING

TO REDUCE THE RISK OF FIRE, ELECTRIC SHOCK, OR INJURY TO PERSONS, OBSERVE THE FOLLOWING:

A. Use this unit only in the manner intended by the manufacturer. If you have questions, contact the manufacturer

B. Before servicing or cleaning the unit, switch power off at service panel and lock service panel disconnecting means to prevent power from being switched on accidentally. When the service disconnecting means cannot be locked, securely fasten a prominent warning device, such as a tag, to the service panel.

C. Installation Work and Electrical Wiring Must Be Done By Qualified Person(s) In Accordance With all Aplicable Codes & Standards, Including Fire-rated Construction.

D. Sufficient air is needed for proper combustion and exhausting of gases through the flue (Chimney) of fuel burning equipment to prevent back- drafting. Follolow the heating equipment manufacturers guideline and safety standards such as those published by the National Fire Protection Association (NFPA), the American Society for Heating, Refrigeration and Air Conditioning Engineers (ASHRAE), and the local code authorities.

E. When cutting or drilling into wall or ceiling, do not damage electrical wiring and other hidden utilities.

F. Ducted systems must always be vented to the outdoors.

WARNING

To Reduce The Risk Of Fire Or Electric Shock, Do Not Use This Hood With Any External Solid State Speed Control Device.

WARNING

GROUNDING INSTRUCTIONS

This appliance must be grounded. In the event of an electrical short circuit, grounding reduces the risk of electric shock by providing an escape wire for the electric current. This appliance is equipped with a cord having a grounding wire with a grounding plug. The plug must be plugged into an outlet that is properly installed and grounded.

WARNING - IMPROPER GROUNDING CAN RESULT IN A RISK OF ELECTRIC SHOCK.

Consult a qualified electrician if the grounding instructions are not completely understood, or if doubt exists as to whether the appliance is properly grounded.
Do not use an extension cord. If the power supply cord is too short, have a qualified electrician install an outlet near the appliance.

WARNING

TO REDUCE THE RISK OF INJURY TO PERSONS, IN THE EVENT OF A RANGE TOP GREASE FIRE, OBSERVE THE FOLLOWING:

A. SMOTHER FLAMES with a close - fitting lid, cookie sheet, or other metal tray, then turn off the gas burner or the electric element. **BE CAREFUL TO PREVENT BURNS**. If the flames do not go out immediately, **EVACUATE AND CALL THE FIRE DEPARTMENT.**

B. **NEVER PICK UP A FLAMING PAN** - you may be burned. **DO NOT USE WATER** including wet dishcloths or towels - a violent steam explosion will result.

Always leave safety grills and filters in place. Without these components, operating blowers could catch onto hair, fingers and loose clothing. The manufacturer declines all responsibility in the event of failure to observe the instructions given here for installation, maintenance and suitable use of the product. The manufacturer further declines all responsibility for injury due to negligence and the warranty of the unit automatically expires due to improper maintenance.

WARNING

Unplug or disconnect the appliance from the power supply before servicing.

TABLE OF CONTENTS

Safety Instructions 3
Dimension/Parts Diagrams 5-9
Installation Requirements 10
Parts List 11
Range Hood Installation 12-14
Baffle Filter Installation 15
Recirculation Charcoal Filters 16
Oil Cup Installation 17
Push Button Controls 18
Soft Touch Controls 19
Maintenance 20
Troubleshooting 21
Warranty & Service 23-24

DIMENSION DIAGRAM - 631 SERIES

63175 / 63190 / 63175S / 63190S

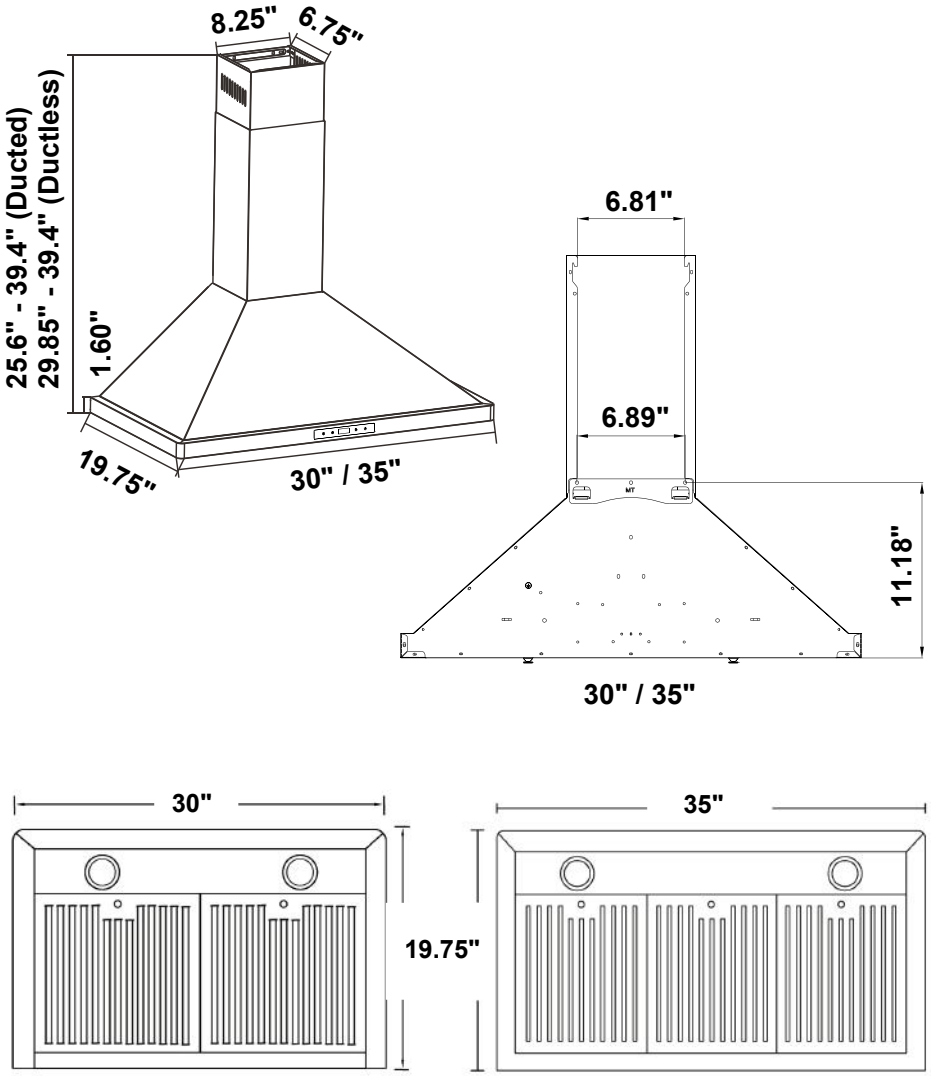

PARTS DIAGRAM - 631 SERIES

63175 / 63190 / 63175S / 63190S

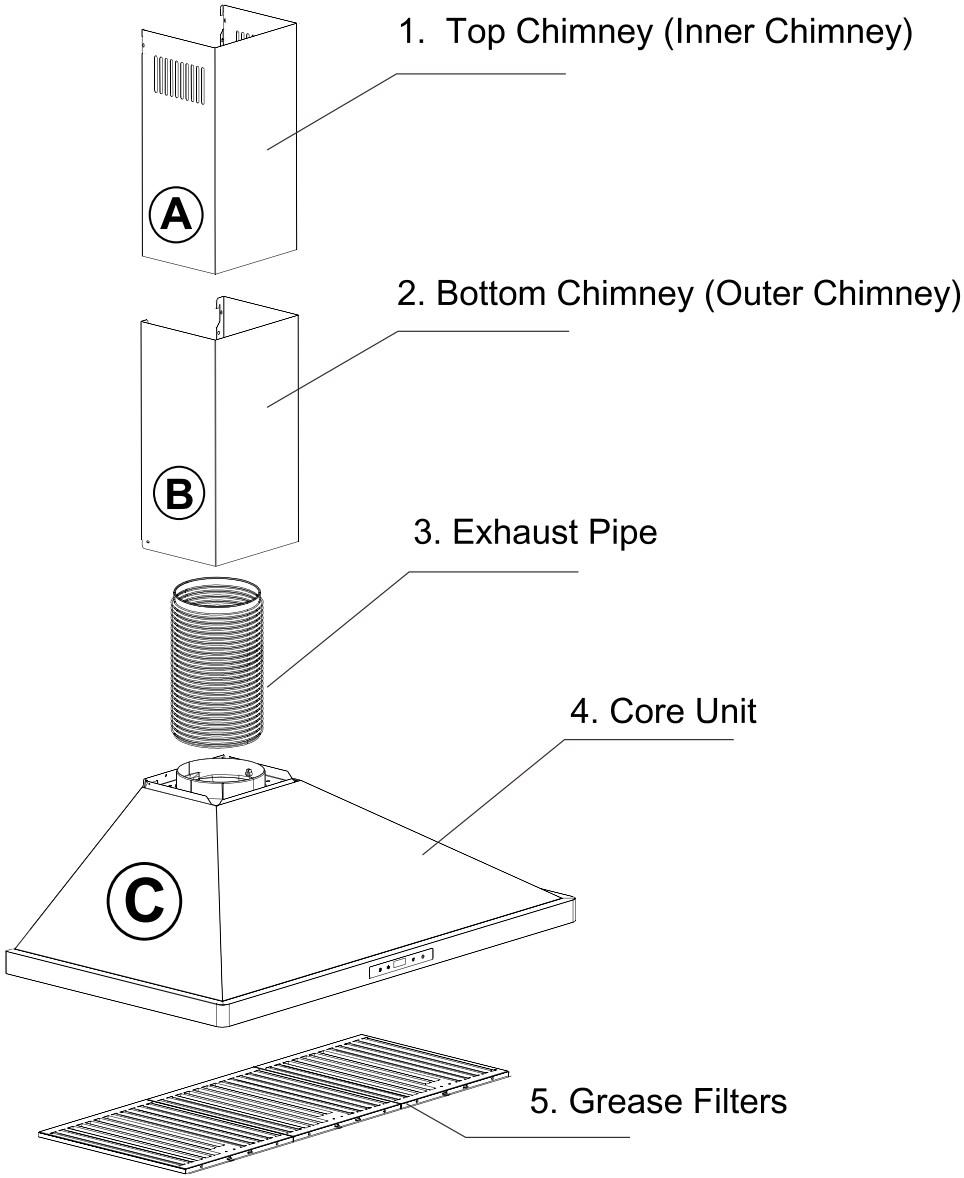

DIMENSION DIAGRAM - 668A/WRC SERIES

668A750 / 668A900 / 668AS750 / 668AS900
668WRC75 / 668WRC90 / 668WRCS75 / 668WRCS90

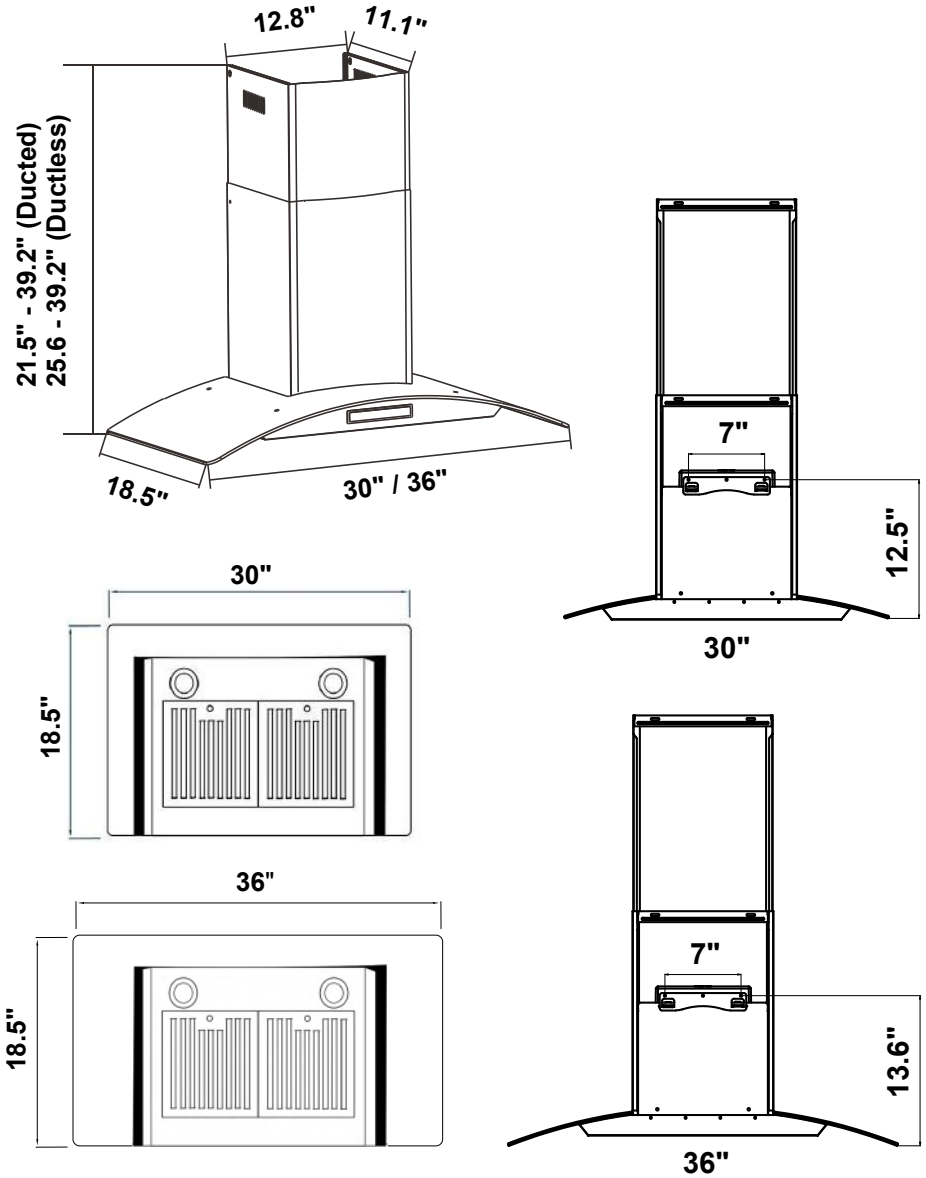

PARTS DIAGRAM - 668A/WRC SERIES

668A750 / 668A900 / 668AS750 /668AS900
668WRC75 / 668WRC90 / 668WRCS75 / 668WRCS90

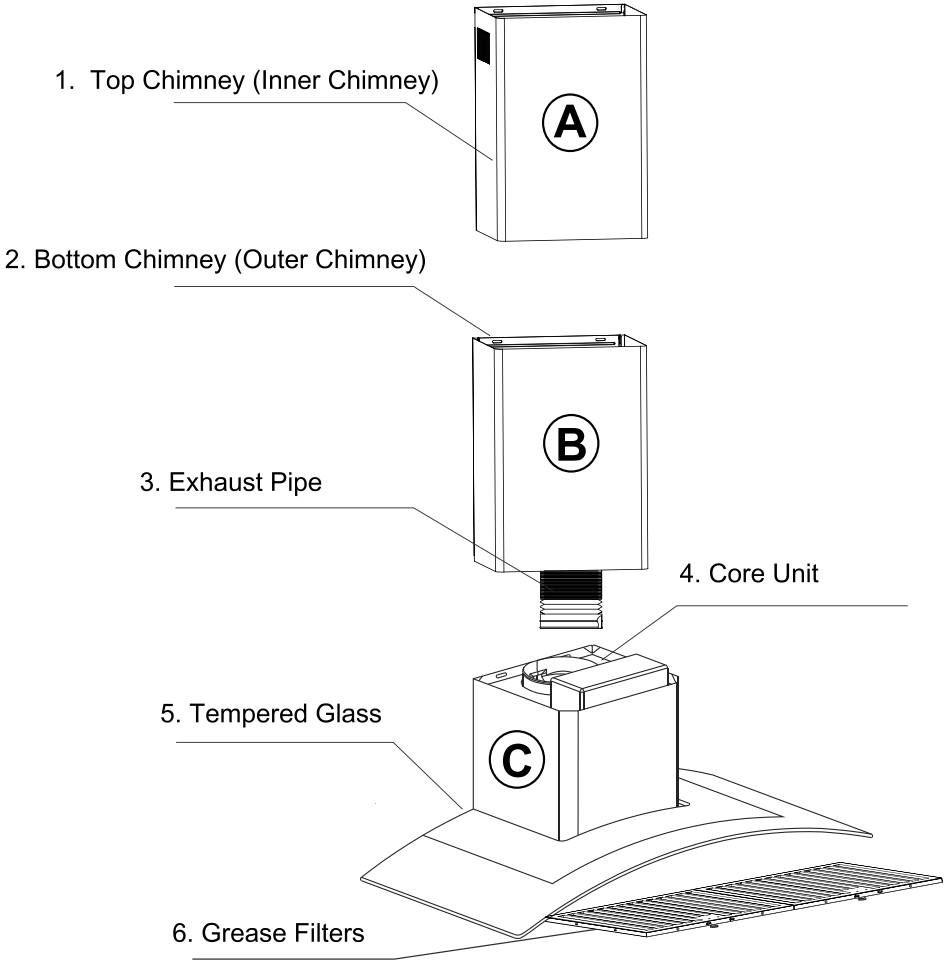

DIMENSION DIAGRAM - 6324EWH

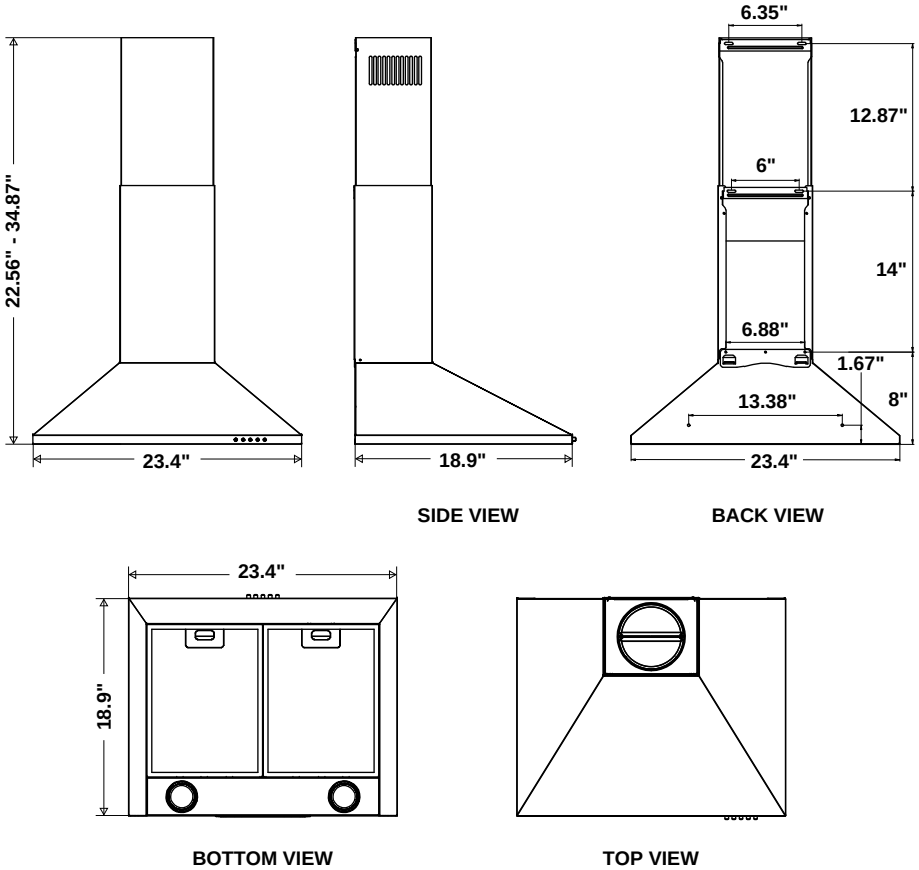

INSTALLATION REQUIREMENTS

1. Do not install the range hood near open doors and windows to avoid reduced performance. (Fig.1)
2. Install the range hood directly above the cooktop. The optimal distance between the cooktop and lower edge of the range hood is 24" to 36". (Fig.2) Install at the height appropriate to your ceiling. Make sure the chimney reaches the ceiling. If your ceiling leaves the hood a few inches higher or lower than 24" to 36" you can still install it without a major loss of performance.
3. For optimal performance, do not over extend the exhaust tube and avoid unnecessary bending. (Fig.3)
4. After hanging the unit on the wall, ensure the range hood is straight and leveled. (Fig.4)
5. The air outlet must be connected to chimney flumes or combustion gas ducts. Under no circumstances should the air outlet be connected to ventilation ducts for rooms in which fuel-burning appliances are installed.

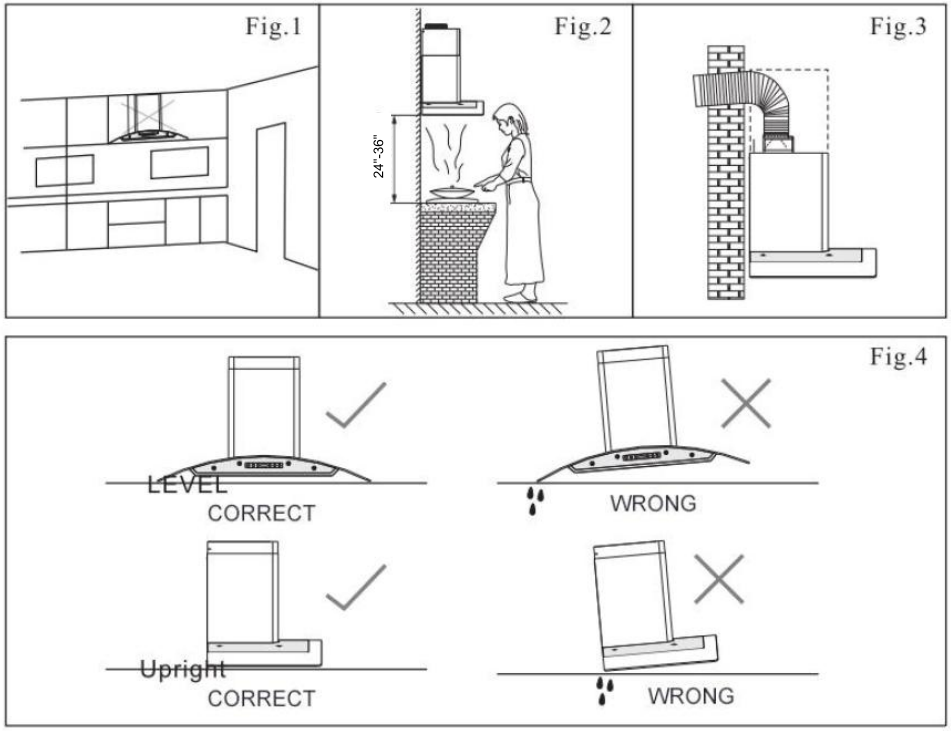

PARTS LIST

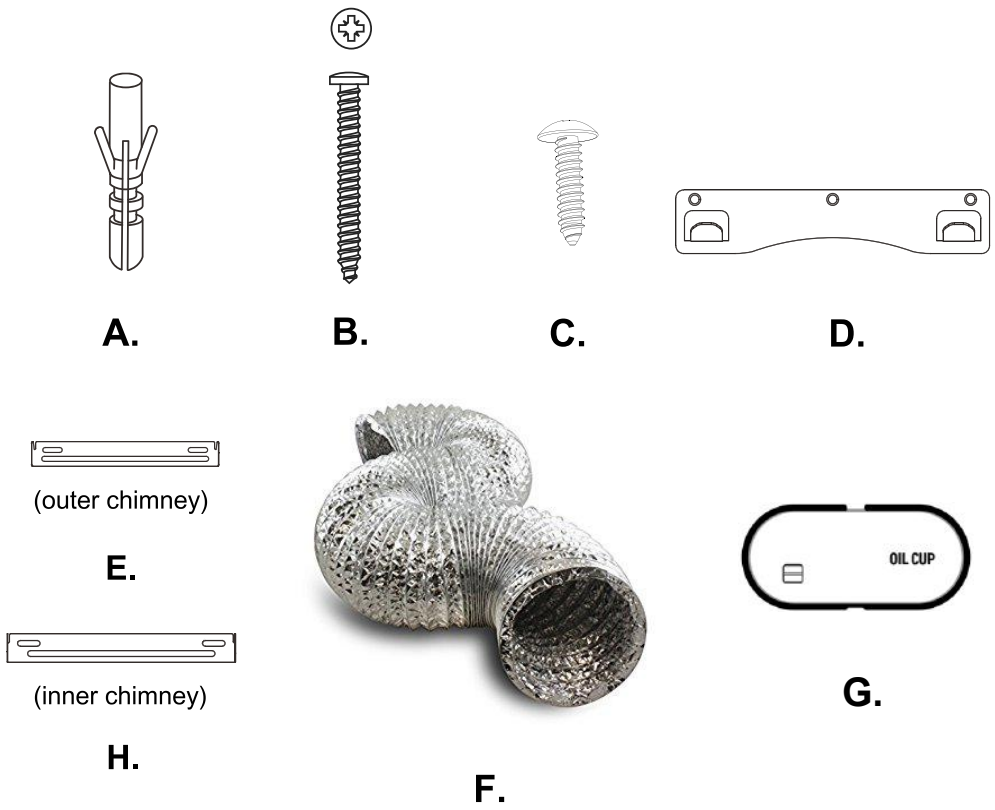

A. *11 pcs 2/8" x 1 3/8" Plastic Anchors*
B. *11 pcs 1/8" x 1 7/8" Screws (48mm)*
C. *4 pcs 1/8" x 3/8" Screws (35mm)*
D. *Core Unit Bracket (Main Body)*
E. *Outer Chimney Cover Bracket*
F. *6 in. Round Aluminum Duct*
G. *Oil Cup*
H. *Inner Chimney Cover Bracket*

Note: Hardware, number of screws, anchors and accessories will vary based on product model.

RANGE HOOD INSTALLATION

Preparing Your Wall / Mounting Instructions

Step 1:

Place the range hood on the wall and mark the position where you want to install.
A height of **24" to 36"** from the cooktop is recommended for optimal performance. Install at the height appropriate for your ceiling. You may install higher if needed. **Make sure the chimney can still reach the ceiling.** If your ceiling leaves the hood a few inches higher or lower than 24" to 36" you can still install it without a major loss of performance.
There are 3 included brackets.
Start your measurements from the top down to make sure the chimney reaches the ceiling with no gap if desired.

*** If you intend to run your ducting through the back wall behind the hood, it is not necessary for the chimney to touch the ceiling.**

Step 2:

A. Find the Core Unit Bracket (D) that will hold the back of the range hood. Mark the locations on the wall with a pencil or marker.

B. Drill a 5/16" (8mm) hole at each marked location.

C. Insert wall anchors into each hole, gently tapping in place.

D. Take the Core Unit Bracket (Part D) that will hold the range hood and firmly tighten with 3 wood screws (Part B) into the anchors.

Secure range hood by hanging on bracket.

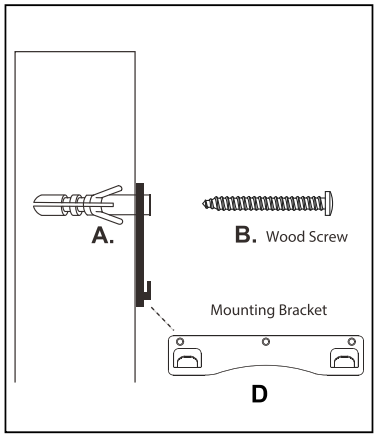

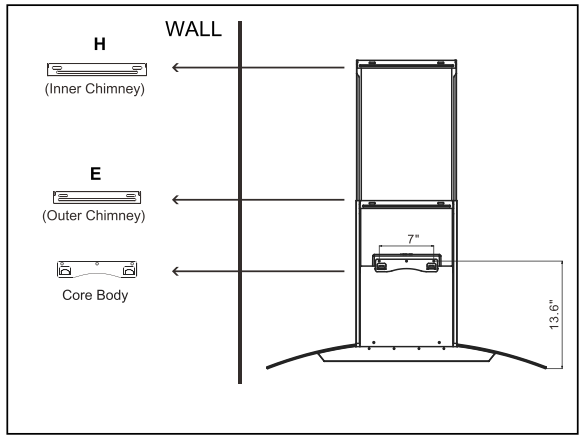

Step 3:

Locate the 6" round aluminum duct (F) and attach it to the top air outlet on the main body of the range hood with HVAC foil tape (not included). Make sure it is connected tightly.

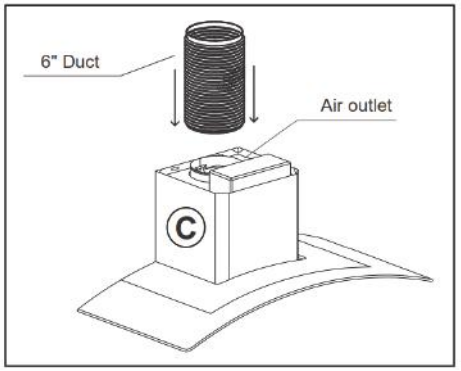

Step 4:

Place the bottom of Outer Chimney into Core Body's seating located near vent hole.
Then Insert the Inner Chimney cover into the Outer Chimney Cover.
Note that the Inner Chimney cover must slide into the Outer Chimney cover's orientation slot.
(see step 7 for mounting bracket install)

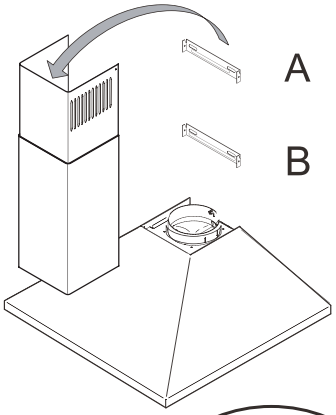

Step 5:

A. Extend the inner chimney cover to the height at which it will touch the ceiling. Using a pencil, place a small mark on each side of the chimney cover which is level with the screw holes of the chimney. Now slide the inner chimney cover down.

B. Using a pencil, place a small mark **on the wall** on each side of the chimney

C. Align the middle of the Inner chimney bracket (H) with the drawn line and make a mark where each screw hole in your wall will need to be drilled for mounting of the bracket.

D. Drill 1/4" holes at each marked location

The drilled hole should be slightly smaller than the diameter of the anchor.

E. Insert anchors into each drilled hole.

F. Align Inner chimney bracket (H) with the drilled holes and firmly screw it into place.

Use 3/8" screws (parts list C)

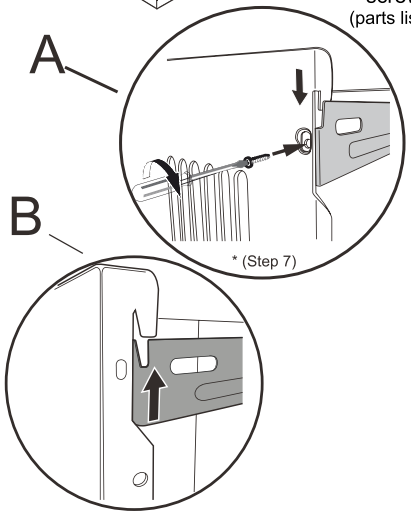

Step 6:

Extend the 6" Duct to the vent pipe of your building or outside. For optimal performance try to minimize bending of the duct.

Step 7:

Mount outer chimney bracket (E) to the wall appropriate to the height of the outer chimney. Use the hooks on bracket to mount bottom chimney.
Extend Inner Chimney until it touches the ceiling. Align sides with Inner Chimney Mounting Bracket (H)(already mounted to wall) and firmly screw sides of Inner Chimney to bracket with 3/8" screws (C in parts list).

*** If you intend to run your ducting through the back wall behind the hood, it is not necessary for the chimney to touch the ceiling.**

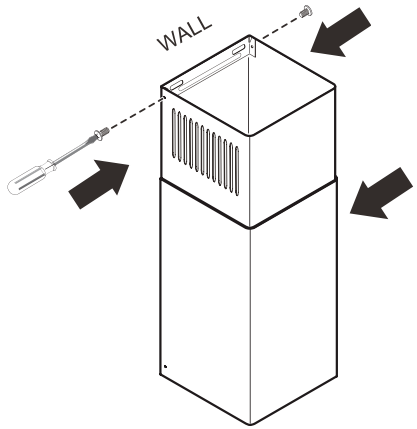

Step 8:

Insert and install filters according to the diagram on **Next Page.**

Start at 90°Angle and line up the hooks on filter with the rectangular slots on the range hood. Lift the filter up and push the button on filters to allow it to lock into place.

BAFFLE FILTER INSTALLATION

Line up filter Hooks to holes in unit.

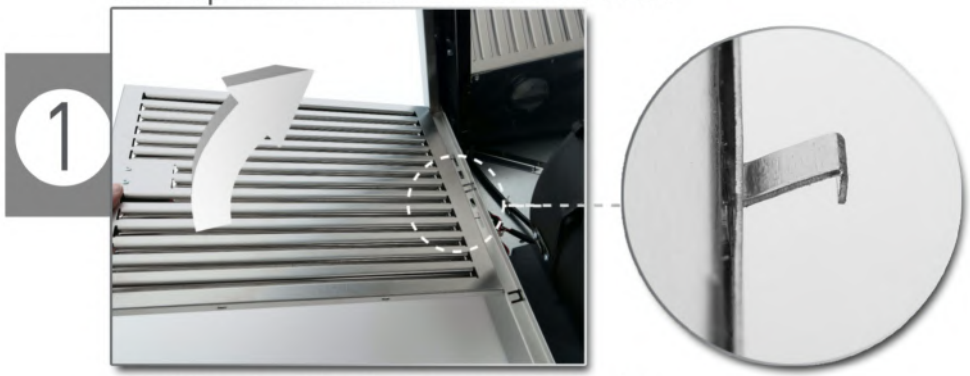

Lift filter for Hooks to go into holes.

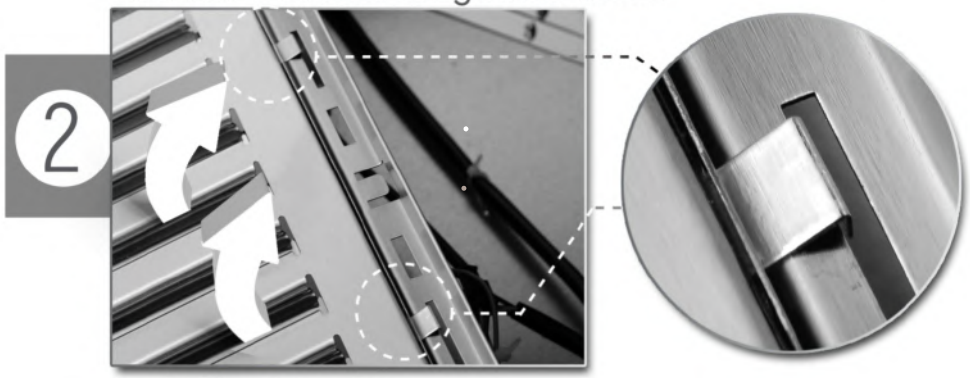

Lock Filter into place

RECIRCULATING CHARCOAL FILTERS

Skip this page if you are installing a Ducted Range Hood.
Charcoal Filters are only included with Ductless Models

Step 1: Remove the ARC-FLOW Baffle Filters.

Step 2: Locate the motor (pictured below) and align one of the filters with the right side of the motor.

Step 3: Twist and lock the filter into place.

Step 4: Repeat Steps 2-3 on the left side of the motor.

Step 5: Reinstall the ARC-FLOW Baffle Filters back into place.

NOTE: Chimney vent holes must be open and visible for the filtered air to recirculate.

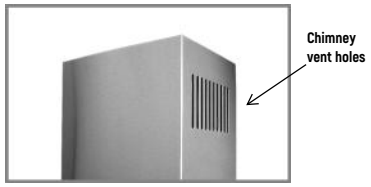

SCAN QR CODE FOR INSTALLATION VIDEO

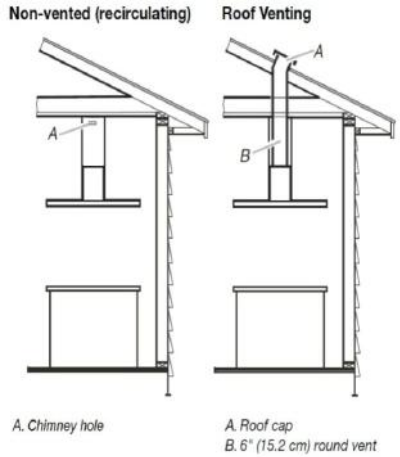

It is recommended that the charcoal filter be replaced every 4-6 months. Charcoal filter replacements are available for purchase at: **www.cosmoappliances.com**. **Charcoal Filter Kit Part# CFK1-TM or CFK6 (COS-6324EWH Model Only)**

OIL CUP INSTALLATION

1 Line up Oil Cup

2 Pull down

3 Snap into place

PUSH BUTTON CONTROLS

COMPATIBLE WITH MODELS:

COS-63175	COS-668A750	COS-668WRC75
COS-63190	COS-668A900	COS-668WRC90

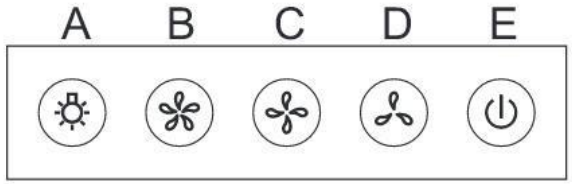

A. Light. Press to turn light on / off.
B. Highest Fan Setting
C. Medium Fan Setting
D. Lowest Fan Setting
E. Power Button. Press to turn unit on / off.
When shutting off, press once to delay shut-off for 1 minute, or press twice to shut off immediately.

COMPATIBLE WITH MODEL COS-6324EWH

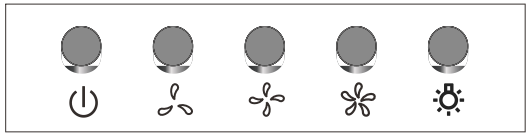

How to use the Push Button:

Press to select on/off.

Press to select the low speed.

Press to select the medium speed.

Press to select the high speed.

Press to turn on /off the light.

SOFT TOUCH INSTALLATION

COMPATIBLE WITH MODELS:

COS-668WRCS75, COS-668WRCS90
COS-668AS750, COS-668AS900
COS-63175S , COS-63190S

A. Light. Press to turn light on / off.
B. Timer Button
C. Minus Button (Fan Speed)
D. Plus Button (Fan Speed)
E. Fan Power Button (Starts Max Fan Speed)
F. Power Button. Press to turn unit On/Off

Note: When Fan is ON + or - will increase or decrease fan speed.

Setting the Clock

1. **Hold Timer Button for 3 Seconds**
   Use Light Button (A) to set Minutes
   Use Fan Speed Button (E) to set Hours
2. **Once time is set, Press Timer button to complete.**
3. **After setting the time, leave the unit alone for 5 seconds for the changes to save.**

Setting the Timer

1. **Turn fan on and set to desired fan speed.**
2. **Press the Timer Button (B).**
   Continue tapping the Timer Button (B) to set the time duration before the fan should automatically turn off.
3. **After setting the timer, leave the unit alone for 5 seconds for the changes to save and the timer will start counting down .**

MAINTENANCE

CAUTION: NEVER PUT YOUR HAND INSIDE OF THE UNIT WHILE ITS OPERATING. FOR THE BEST PERFORMANCE CLEAN YOUR RANGE HOOD REGULARLY.

CLEANING

1. Use only mild soap or cleaning solutions to clean the range hoods outer surface. Dry surfaces using a soft cloth.
2. Stainless Steel cleaner may be used on the external surface.
3. **Cleaning the Baffle Filters:** For daily cleaning, use hot, soapy water and a soft cloth. Wipe dry and finish with a damp micro-fiber cloth. Baffle filters can also be cleaned in the dishwasher.
4. Clean the Range Hood assembly once every 6 months.
5. **DO NOT** clean the motor or electrical components with water or any other liquid

REPLACING LIGHT BULBS

CAUTION: LAMP UNIT MAY BE HOT! WAIT UNTIL THE UNIT IS COOL. *BEFORE ATTEMPTING TO REPLACE THE LED LAMPS MAKE SURE THE UNIT IS POWERED OFF AND UNPLUGGED.*

Note: Individual LED bulbs cannot be replaced only LED lamps.

1. Remove the baffle filters
2. Find the wire connection of the lamp and unplug.
3. Remove old LED lamp.
4. Plugin new LED lamp.
5. Reinstall the baffle filters.

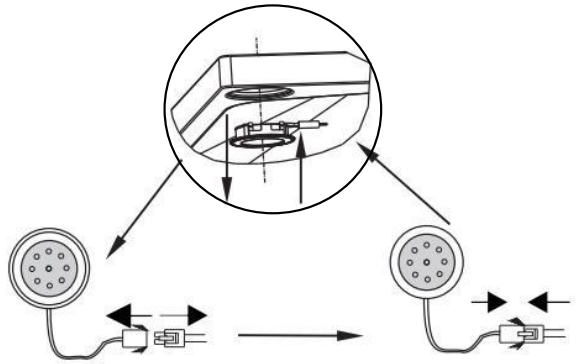

TROUBLESHOOTING

CAUTION: ALWAYS DISCONNECT UNIT FROM POWER BEFORE SERVICING

PROBLEM	SOLUTION	TOOLS
My range hood is noisy	A. Check inside the range hood for any loose debris and remove. *If your range hood is still noisy after checking, please call 1-888-784-3108.*	Phillips Screwdriver
My range hood has poor performance	A. The range hood and cooktop are too far away from each other. **Optimal distance is 24" to 36"** B. There are too many open windows or doors in the area. Close some doors or windows. C. The motor performance has decreased due to wear. Replace motor. D. Check and make sure the tape holding down the damper flaps at the vent hole are removed before use. E. The oil cup is full and needs to be cleaned out. F. The filters are clogged and need to be cleaned.	Phillips Screwdriver
My range hood shakes	A. The installation is not secure. Check again and make sure the installation hardware is securely mounted. B. The fan is broken or not balanced. Re-align or replace fan. C. The motor is loose. Check and make sure the motor is solidly mounted to the unit. D. Baffle filter is loose and is not installed correctly. Read page 12 for installation instructions.	Phillips Screwdriver
Range Hood does not turn on	A. Make sure that range hood is plugged into powered outlet. Test outlet with other device if not working. B. Remove baffle filters, reach inside behind the control panel and locate the wire with clip. Make sure control panel is securely plugged in.	Phillips Screwdriver
Light bulbs went out	A. Replace with a new LED lamp assembly. B. Remove baffle filters, reach inside behind the control panel and locate the wire with clip behind the light housing. Make sure the light is securely plugged in.	Phillips Screwdriver

WATCH OUR VIDEO GUIDE
cosmoappliances.com/wm-help
Call Support: 1-888-784-3108

SCAN QR CODE

NOTE:

COSMO

APPLIANCES

WARRANTY AND SERVICE

For full warranty details on this product please visit:
http://www.cosmoappliances.com/warranty

TO RECEIVE WARRANTY SERVICE, YOUR PRODUCT MUST BE REGISTERED. TO REGISTER, VISIT:

WWW.COSMOAPPLIANCES.COM/WARRANTY

SCAN TO REGISTER

IMPORTANT

Do Not Return This Product To The Store If
you have a problem with this product, please contact
Cosmo Customer Support at
+1(888)784-3108
DATED PROOF OF PURCHASE, MODEL #, AND SERIAL #
REQUIRED FOR WARRANTY SERVICE

IMPORTANT

Ne pas Réexpédier ce Produit au Magasin
Pour tout problème concernant ce produit, veuillez contacter
le service des consommateurs Cosmo Customer Support au
+1(888) 784-3108
UNE PREUVE D'ACHAT DATEE EST REQUISE POUR BENEFICIER DE
LA GARANTIE.

IMPORTANTE

No regrese este producto a la tienda
Si tiene algún problema con este producto, por favor contacte el
AYUDA AL CLIENTE COSMO al
+1(888)784-3108
(Válido solo en E.U.A).
NECESITA UNA PRUEBA DE DE COMPRA FECHADA, NÚMERO DE
MODELO Y DE SERIE PARA EL SERVICIO DE LA GARANTÍA

Correct Disposal of this product:

This marking indicates that this appliance should not be disposed with other household wastes. To prevent possible harm to the environment or human health from uncontrolled waste disposal, recycle it responsibly to promote the sustainable reuse of material resources.

Cosmo is constantly making efforts to improve the quality and per formance of our products, so we may make changes to our appli ances without updating this manual.

Electronic version of this manual is available at:
www.cosmoappliances.com