Lightray | 6123ABZ

Job Name:_____ Job Type:_____ Quantity:_____ Comments:_____

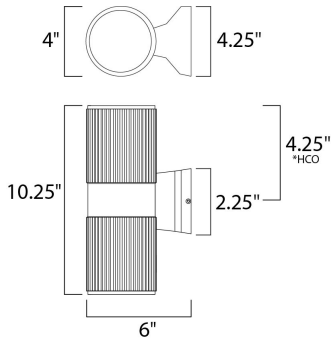

*height from center of outlet to the top of the fixture

Measurements:

Height	Width	Extension
10.25''	4.00''	6.00''
BP Height	BP Width	HCO
2.25''	4.25''	4.25''
Hanging Weight		
2.21 lb		

Lamping:

Incandescent R20 MB

2.00 50W R20 MB

100 total watt

Dimmable : Standard Dimmer

0 Rated Lumens

Color Temperature

Shipping:

Carton Weight	Carton Width	Carton Height	Carton Length
2.65 lb	6.50''	11.80''	8.27''
Master Pack Weight	Master Pack Width	Master Pack Height	Master Pack Length
20.94 lb	13.00''	14.17''	25.40''
Master Pack Qty	UPC	UPS	
10.0000	783209109803	Yes	

Finish:

Architectural Bronze ABZ

Material:

Die Cast Aluminum

Certification:

Wet Location

Additional:

R20 MB (Not Included)
Lighting Direction: BOTH

MAXIM LIGHTING

253 NORTH VINELAND AVE. | CITY OF INDUSTRY, CA 91746
T. 626.956.4200 | F. 626.956.4225

maximlighting.com
#Maximlighting

Always consult a qualified, licensed electrician before installation of any products....