PIONEER FAUCETS
STYLE THAT WORKS

3LG130
Legacy SERIES

Two Handle Lavatory Faucet
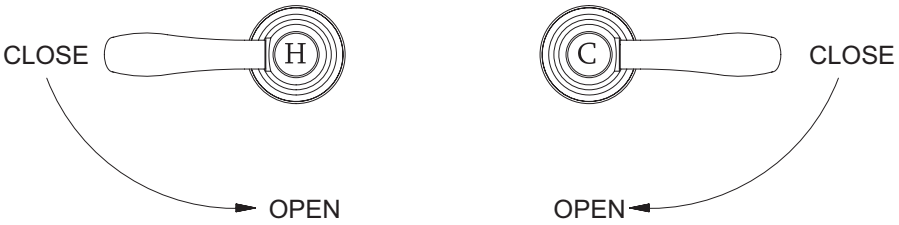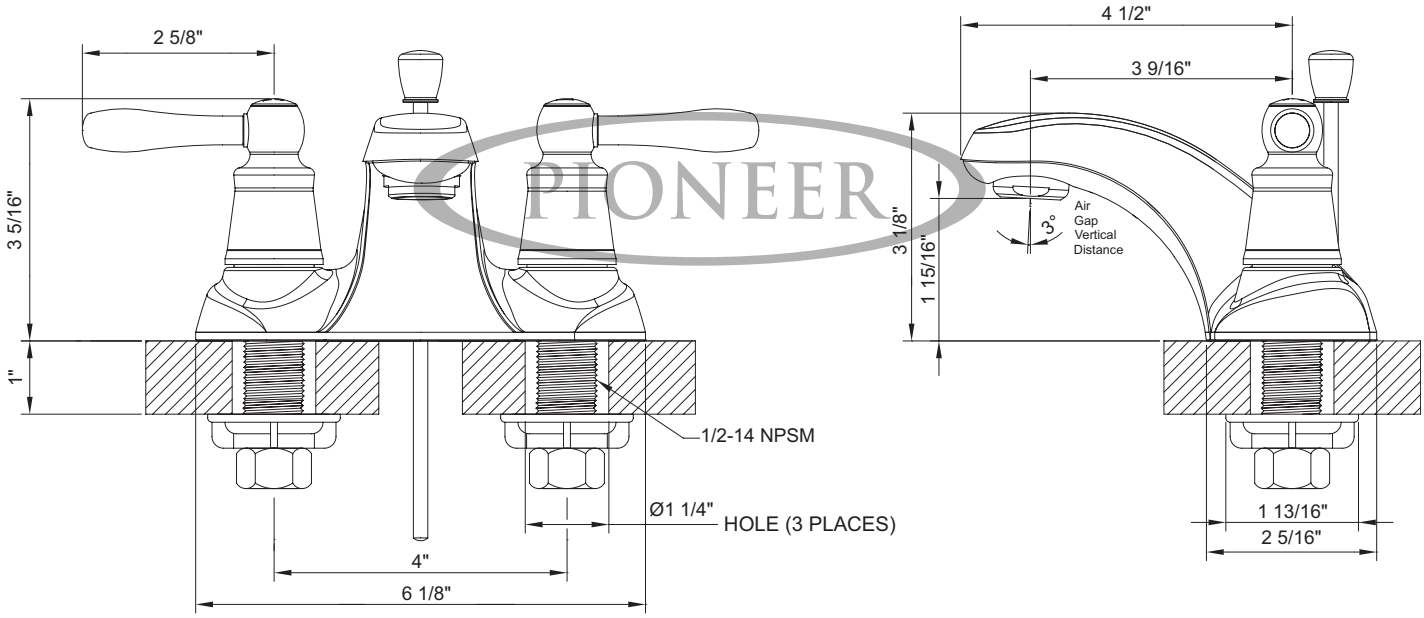
- Metal Lever Handles
- 3-9/16” Reach, 1-15/16” from Deck to Aerator
- Ceramic Disc Cartridges
- 3-Hole 4” Installation
- Brass Pop-Up Drain Assembly
- With 1.2 GPM Flow Rate