Collection:Axel

Installation manual for:

LD8022W24BR W24.7″ H9.9″ E7.1″ L5

Installation instructions:

1. 1.Check all of the package contents before installation.
2. Install the mounting bracket (P1) to the outlet box using the screws (P2).
3. Connect the wire with L marking from the fixture to the BLACK wire from the outlet box.
4. Connect the wire with N marking from the fixture to the WHITE wire from the outlet box.
5.Loop the grounding wire(E wire) from the fixture under the head of the green ground screw on the mounting bracket(P1) and connect it to the grounding conductor from the supply circuit.
6. Align the holes in the fixture with the mounting screws (P3) and secure it by screwing the ball nuts (P4).
7. Install the light bulbs (not included) into the sockets(P5).
8. Connect the power.

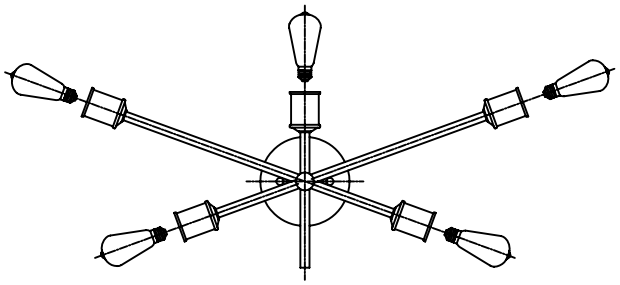

Front View

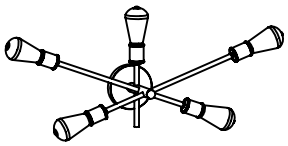

3D View

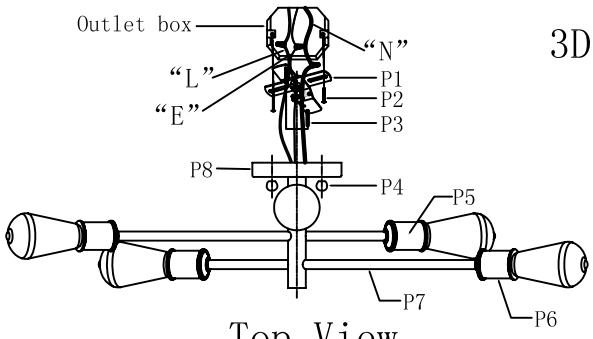

Top View

"L" = Hot wire
"N" = Neutral wire
"E" = Ground wire

PARTS LIST

part	picture	Description	Qty	Check list
P1		mounting bracket	1	
P2		8/32″ Screw	2	
P3		8/32″ Screw	2	
P4		Ball Nut	2	
P5		E26 Socket	5	
P6		Cup	5	
P7		Arm	1	
P8		Φ4.7*H1 Canopy	1	