CC44451,2,8TL
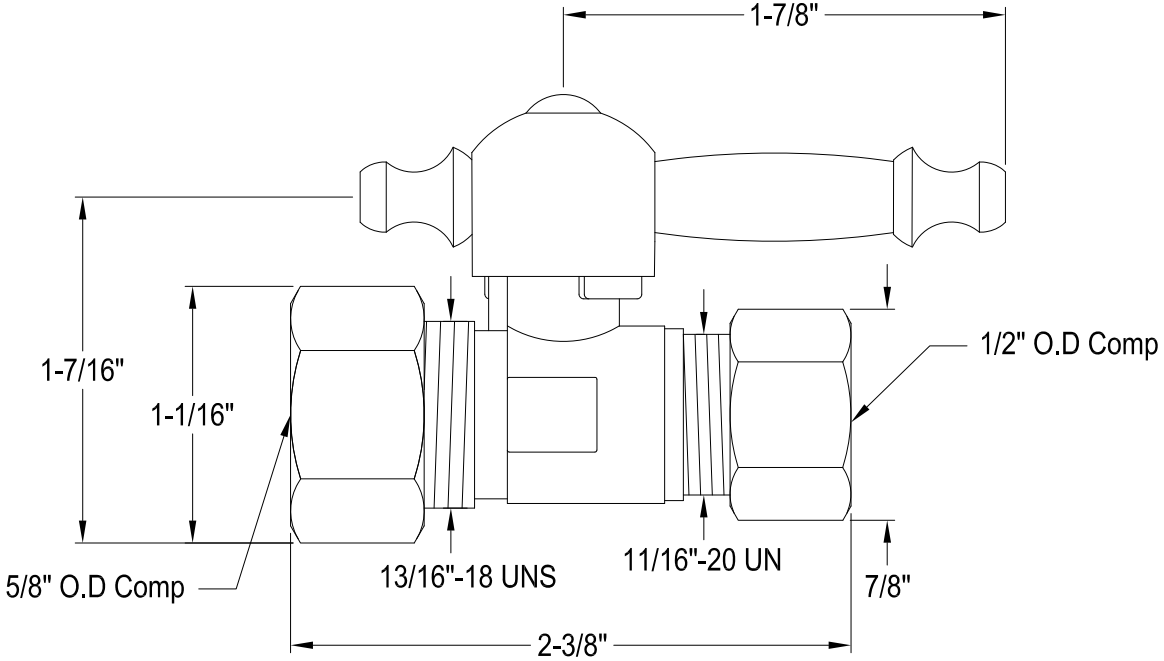
Quarter Turn Valves, 5/8" O.D Comp x 1/2" O.D Comp