KB2631,2,4,5,7,8,9MLTO
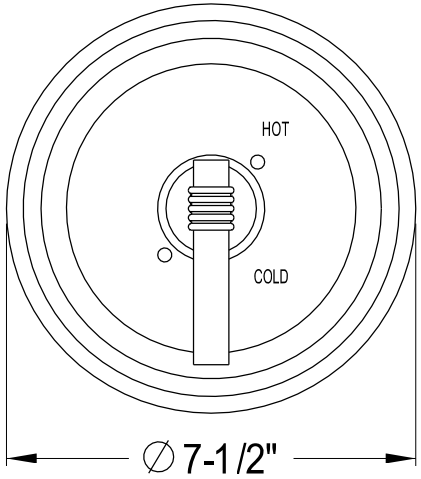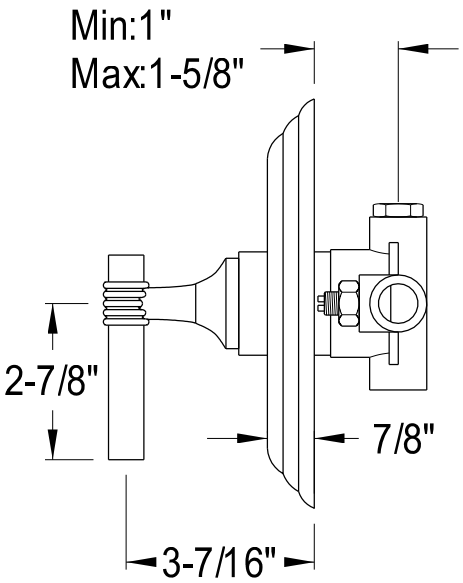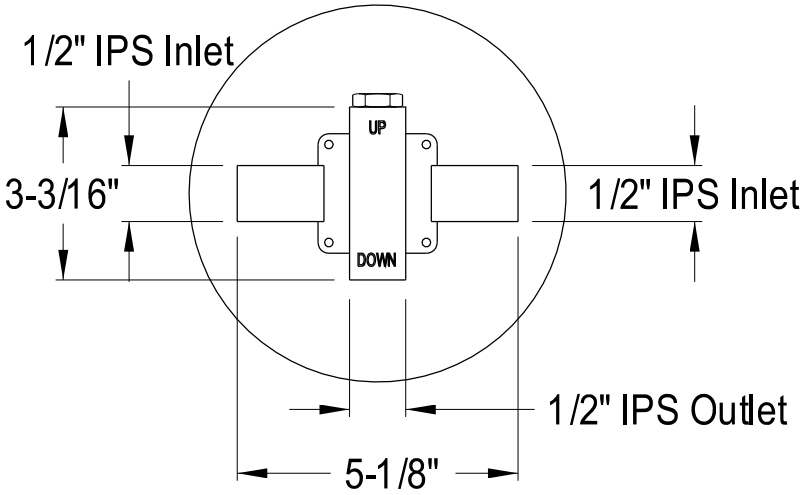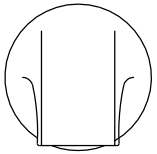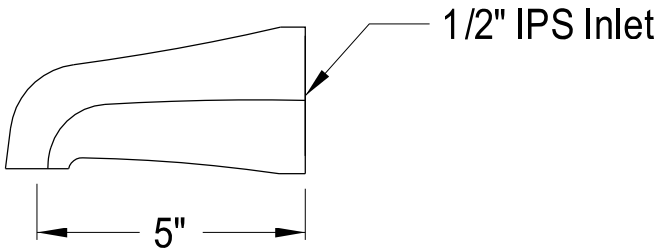
Single Handle Pressure Balanced Tub & Shower Faucet, Tub Only