ITEM NO.	PART NUMBER	DESCRIPTION	QTY.
1	BPRD	Base	2
2	WASP	NECK	2
3	GLRT-22	GLASS	1
4	TU12-.75"	SUPPORT TUBE	4
5	CRRD-34	RING	2
6	BL3T-1	LOWER BALL	4
7	BL1T-34	End Ball	4
8	TU12-3"	LONG TUBE	2
9	TU12-18.4"	END TUBE	1

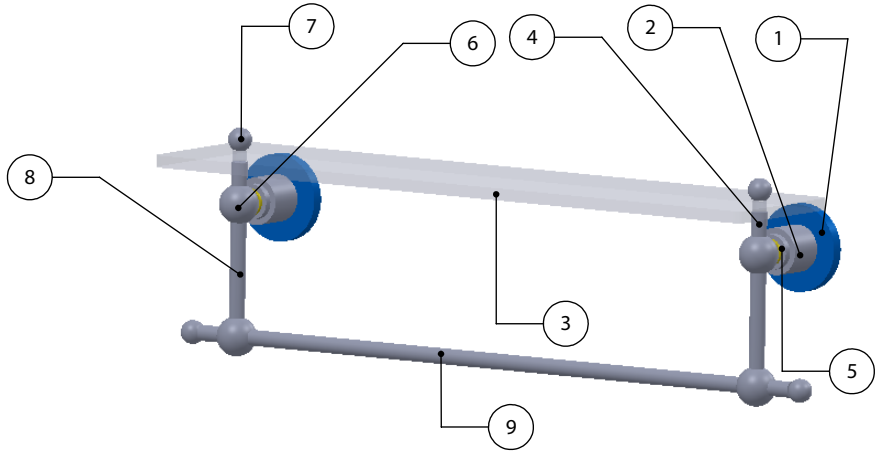

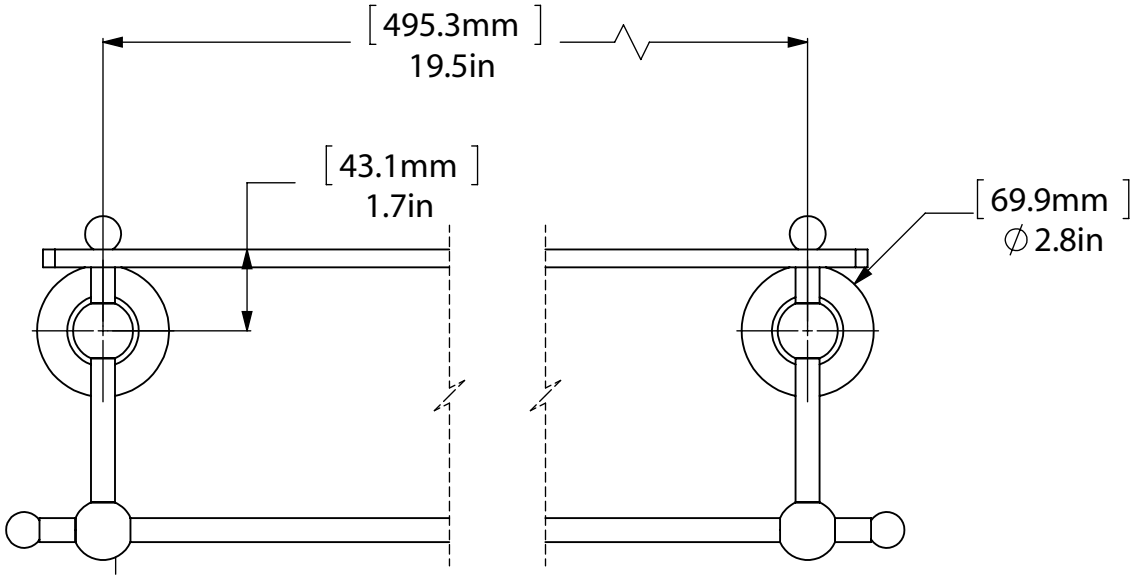

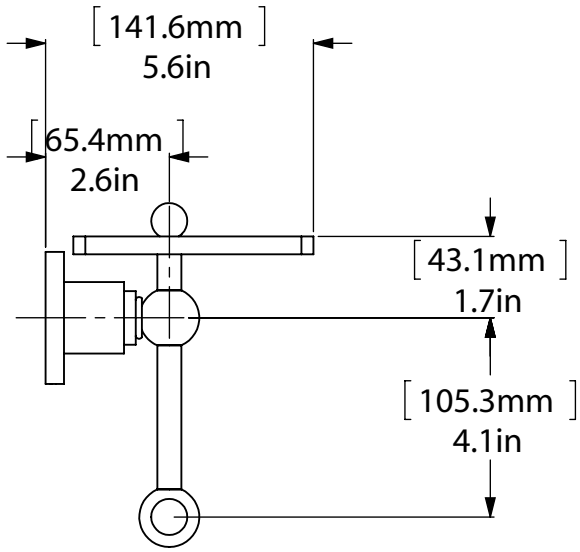

CONFIDENTIALITY/LIMITED LIABILITY STATEMENT
This document (and any files attached to it) is confidential and intended only for the person or entity to which it is delivered. If you are not the intended recipient, then you have received this document by mistake and any use, dissemination, forwarding, printing or copying of this document and its file attachments is prohibited. Please notify ALLIED BRASS INC. immediately either by telephone or by email, delete the misdirected document from your system and destroy any copies you have made of it. We do not accept any liability for any loss or damage which may arise from your receipt of this document.

UNLESS OTHERWISE STATED

DO NOT SCALE DRAWING
CHAMFER ALL EDGES 0.5X45°
DRAWING ISO
FIRST ANGLE PROJECTION

X.XXX	+/-0.025
X.XX	+/-0.1
X.X	+/-0.25
X	+/-0.75

ANGLES

X.XX	+/-0.05°
X.X	+/-0.1°
X	+/-0.5°

MACHINED FINISH 3.2

	INITIALS	DATE
DESIGNED		IJM
DRAWN		IJM
CHECKED		R. ANDRIS
PROJ.ENG		
SAFETY		
APPROVED		R. ANDRIS
FILENAME	AP-1TB-22	

ITEM	QTY	DRG/PART NO	CLIENT:

MATERIAL	BRASS	WEIGHT	
HEAT TREAT	NA		
CUSTOMER		CUSTOMER No	

DESCRIPTION: AP-1TB-22

FINISH	TBD
QUANTITY	---
DRAWING No.	AP-1TB-22
REV	0
SCALE	1:4
SHEET: 01	A4