HEADBOARD SET ASSEMBLY INSTRUCTION (TOTAL 1 BOX)

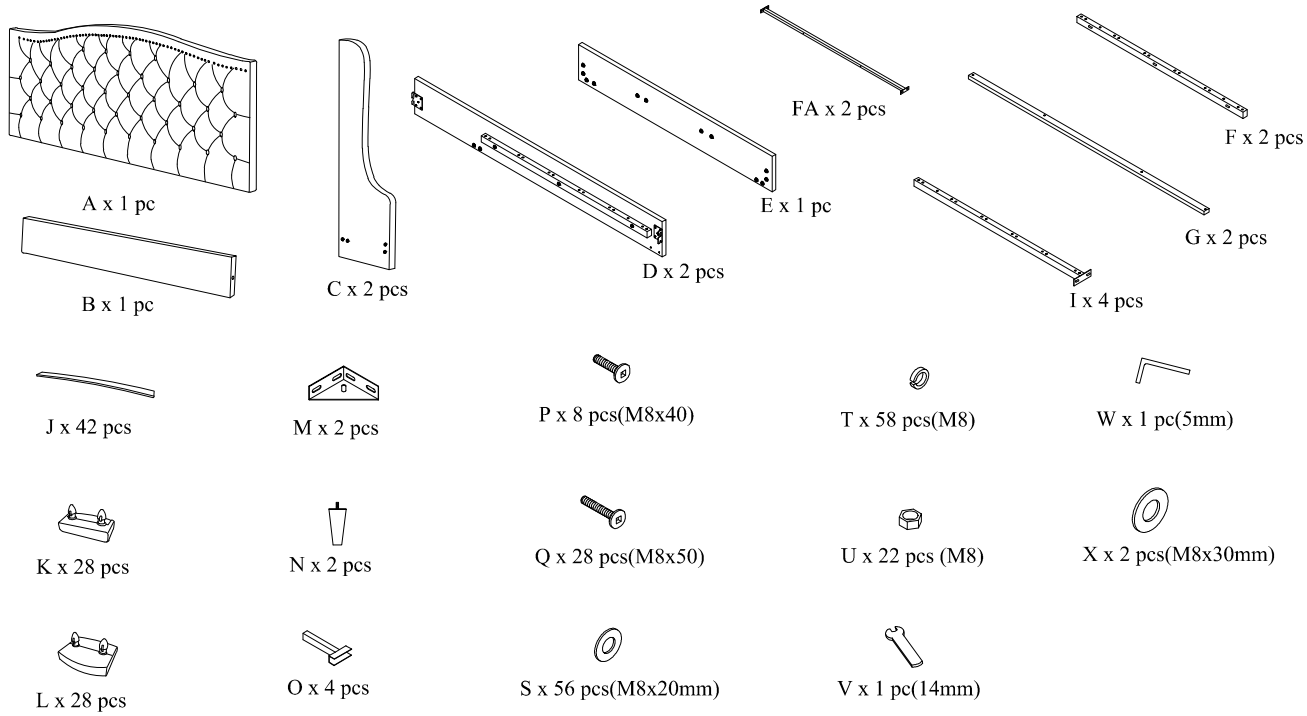

1

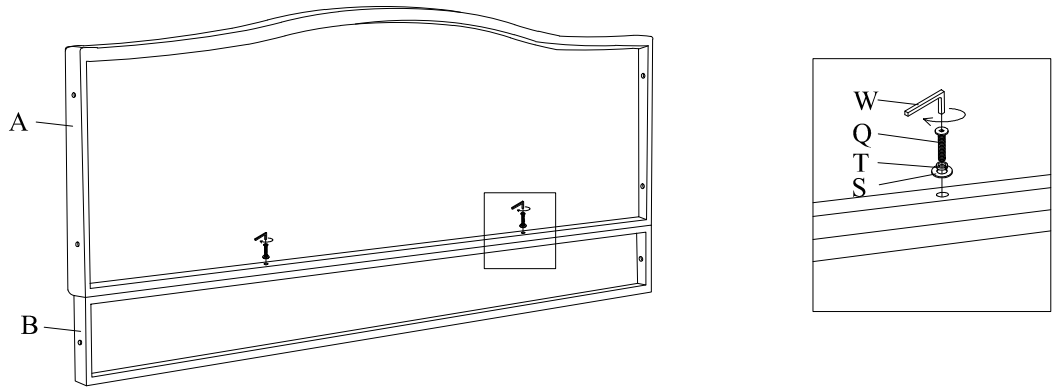

2

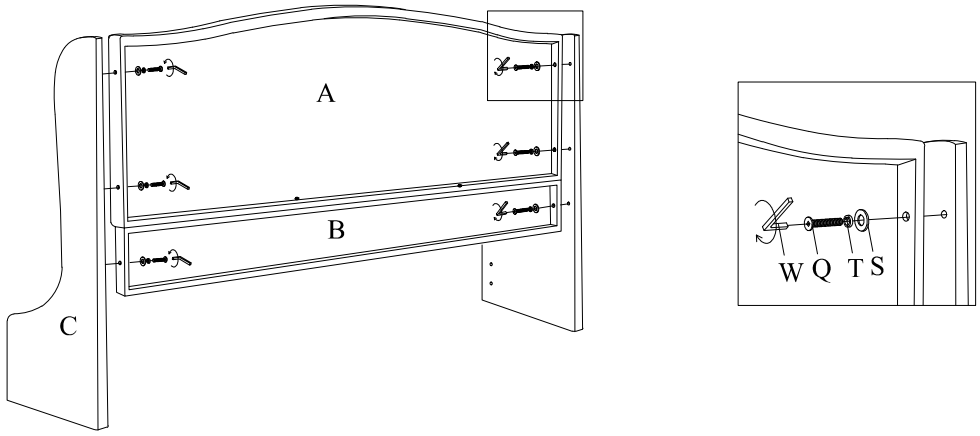

3

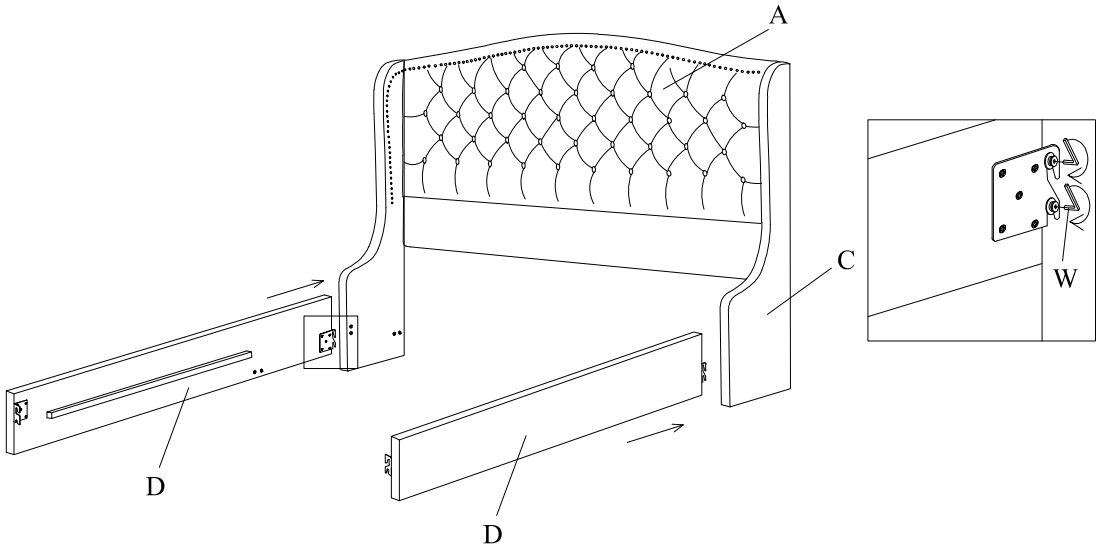

4

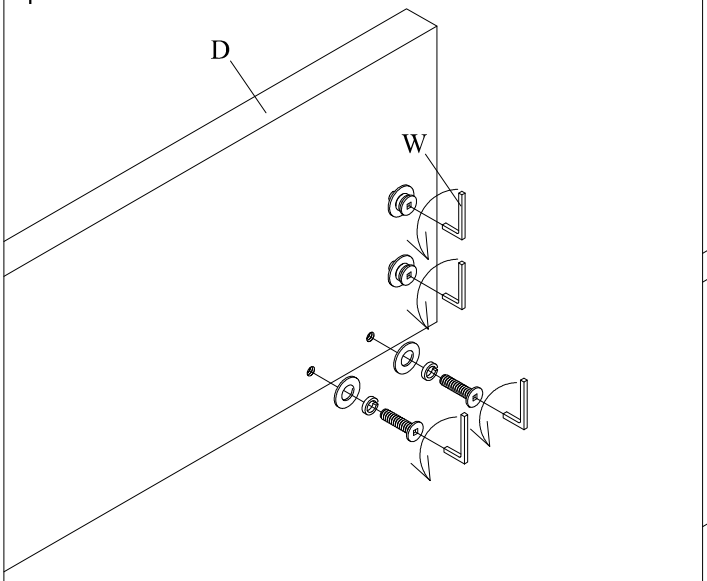

5

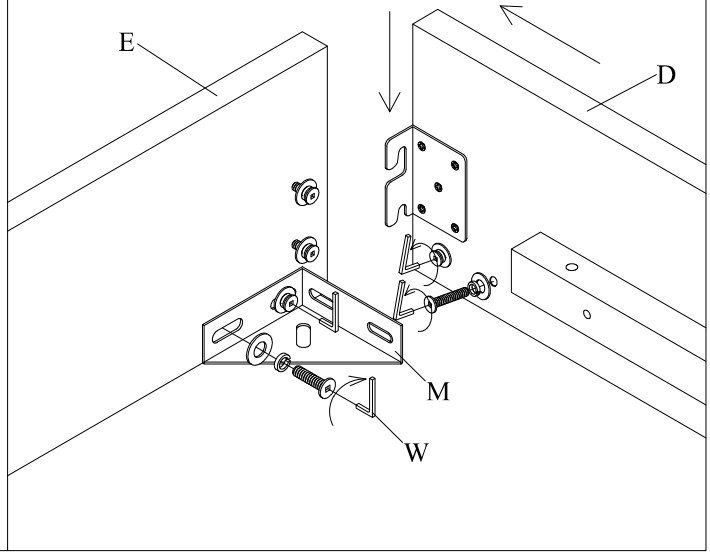

6

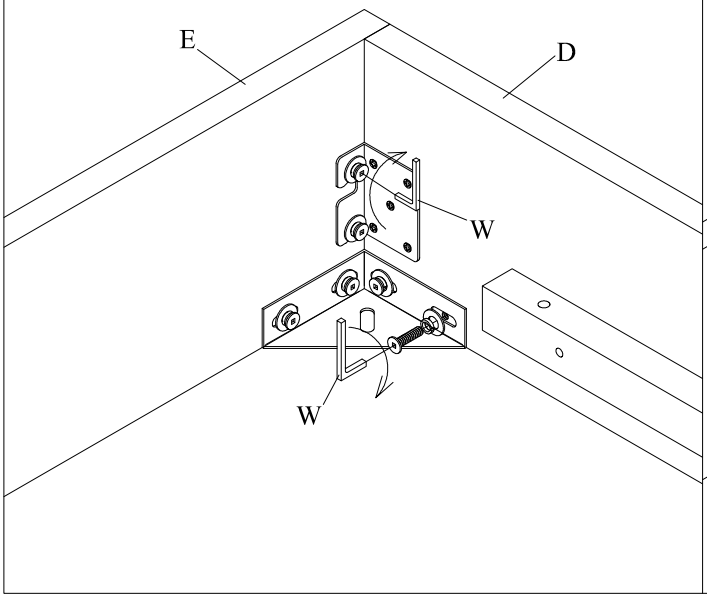

7

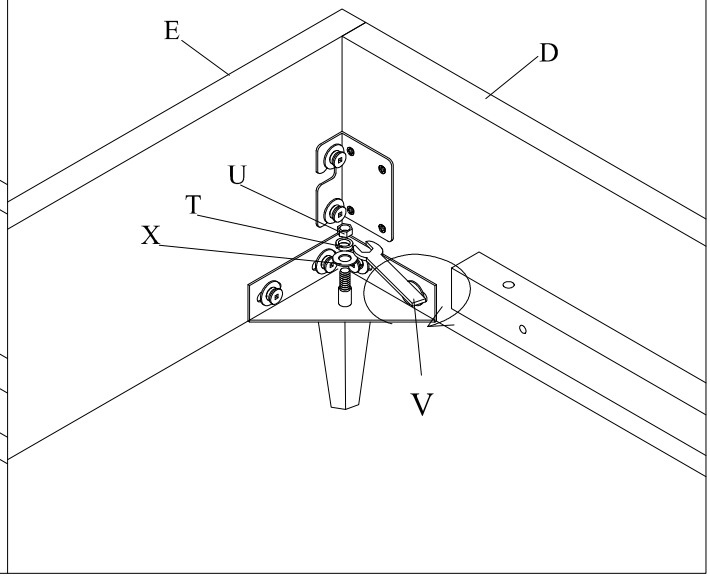

8

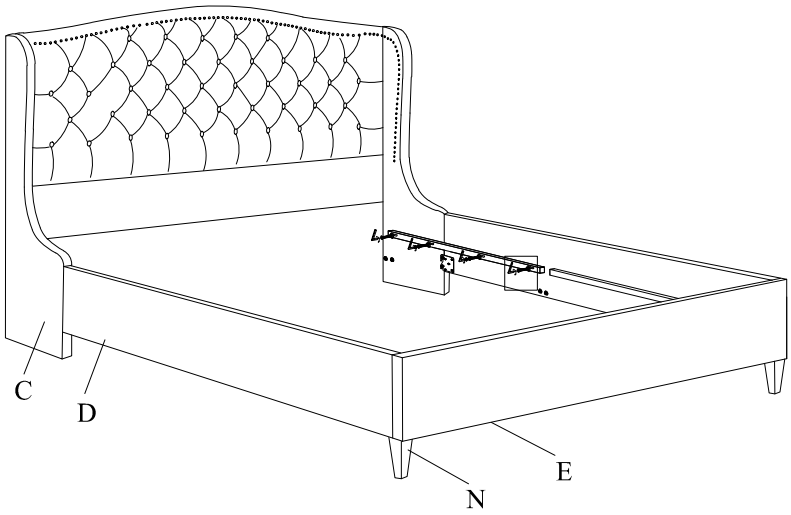

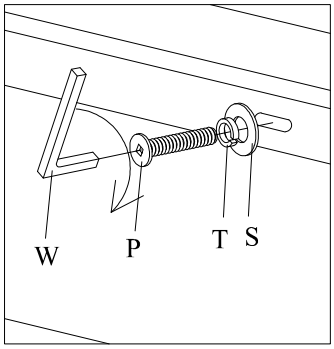

9

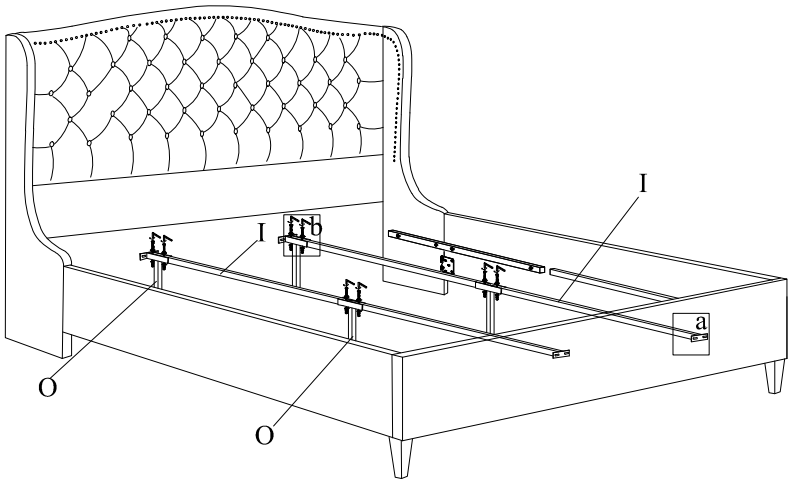

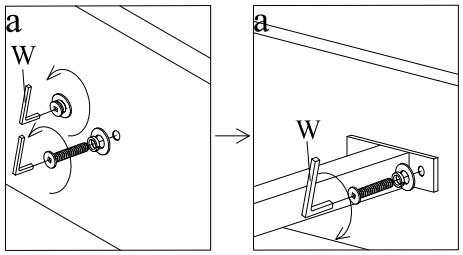

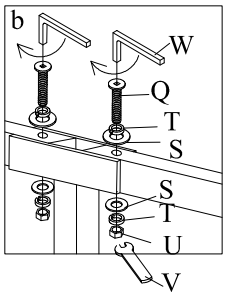

10

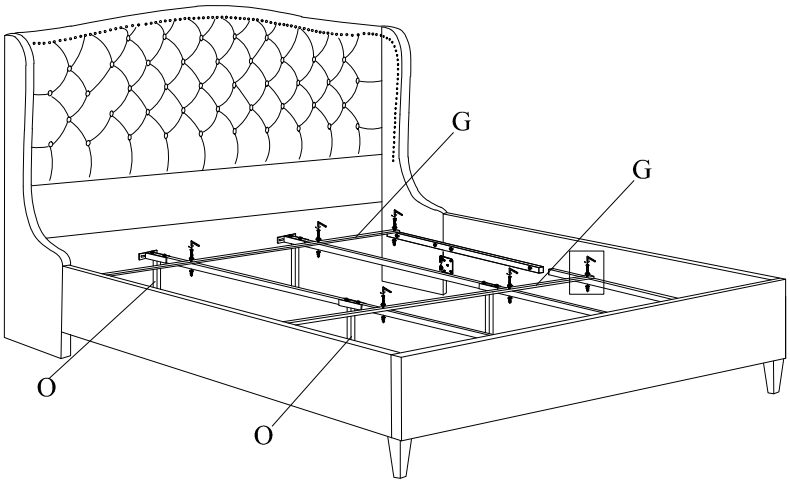

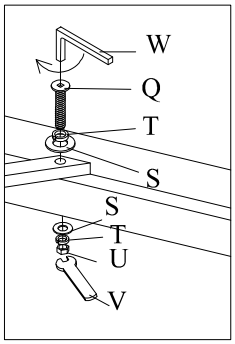

11

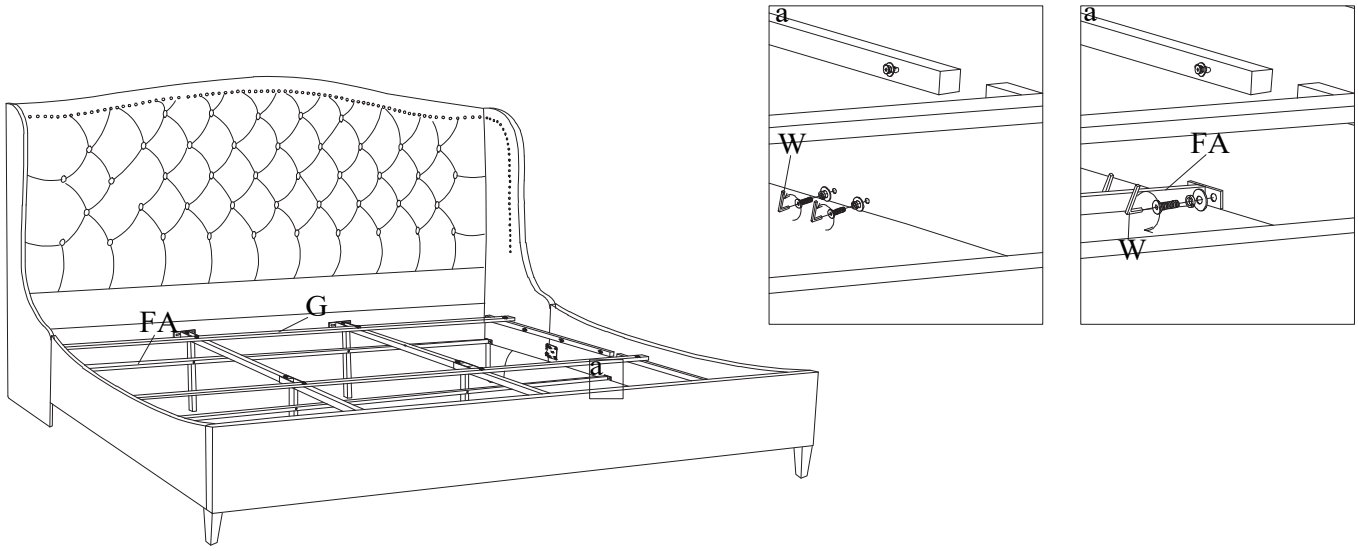

12

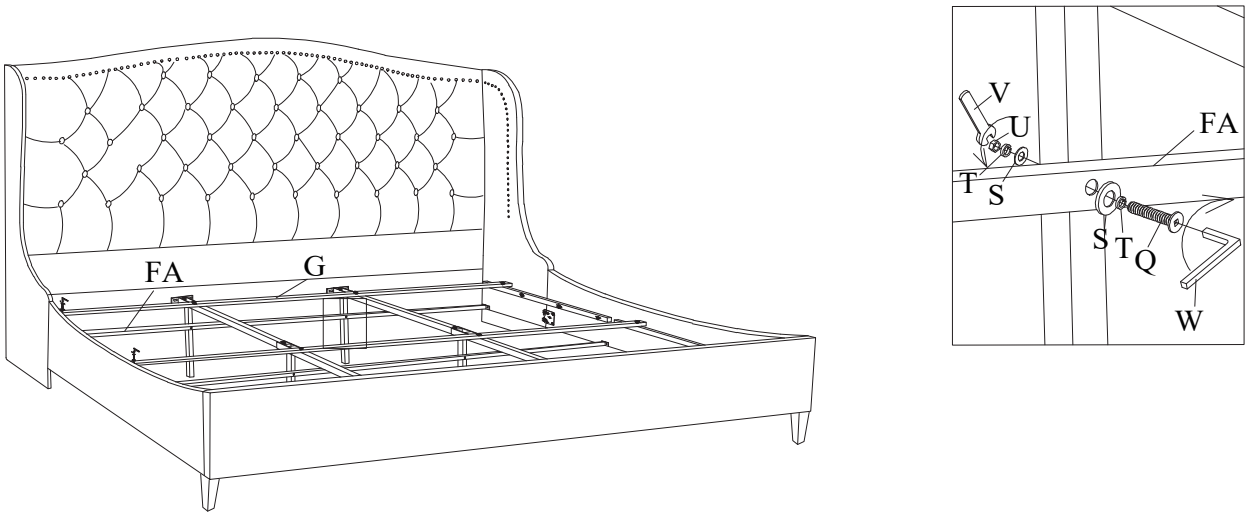

13

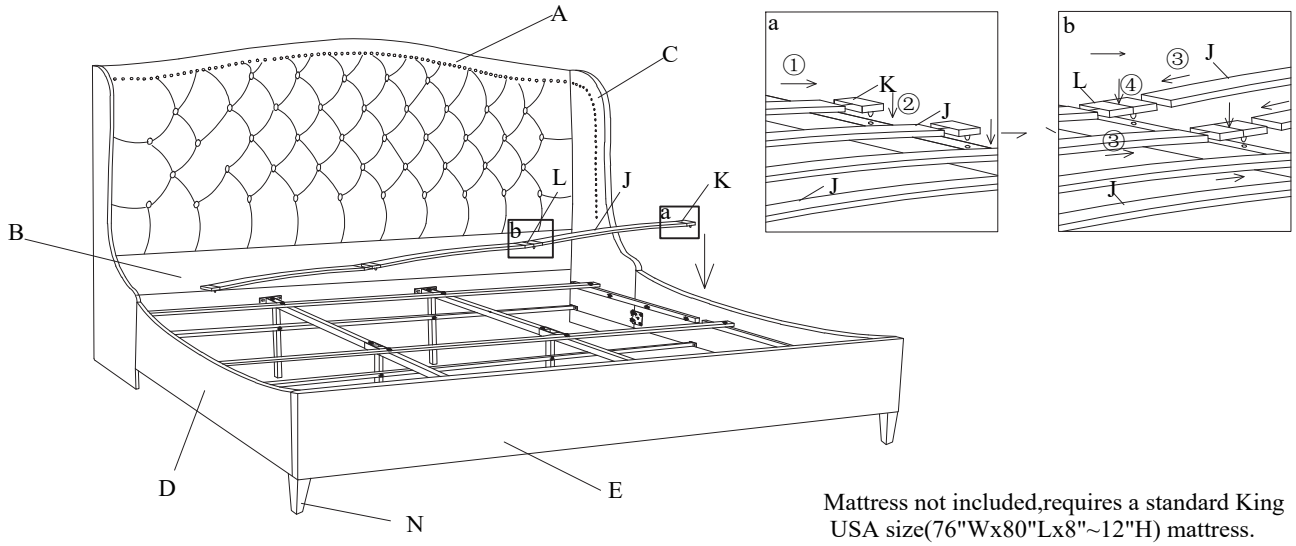

Mattress not included,requires a standard King USA size(76"Wx80"Lx8"~12"H) mattress.