ABGR3318 | Stainless Steel Kitchen Sink Grid

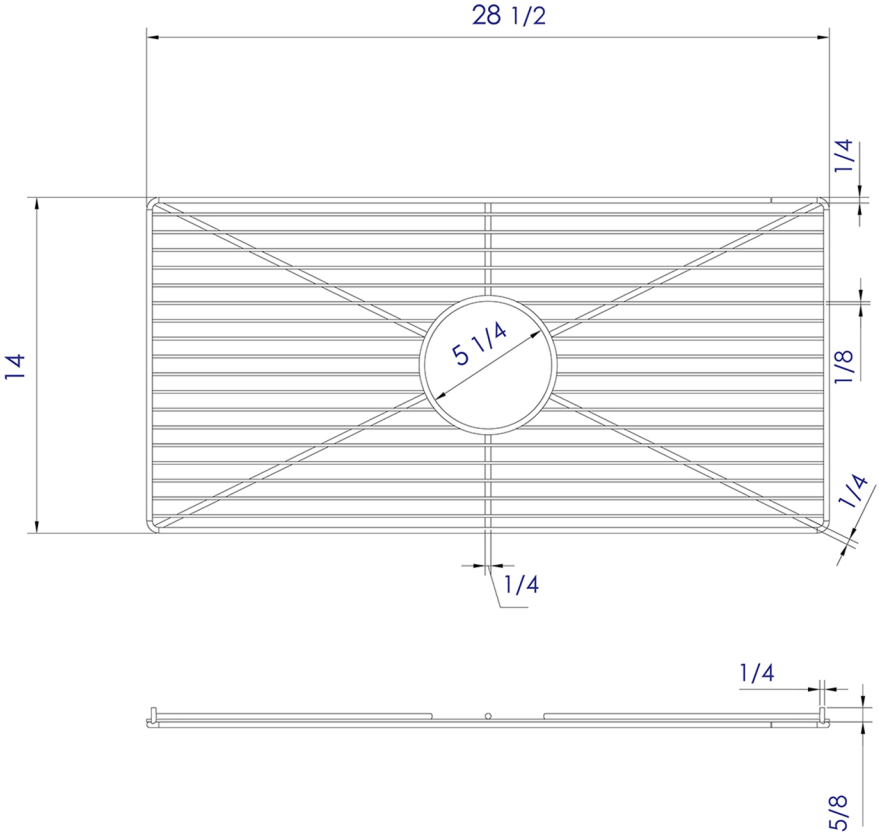

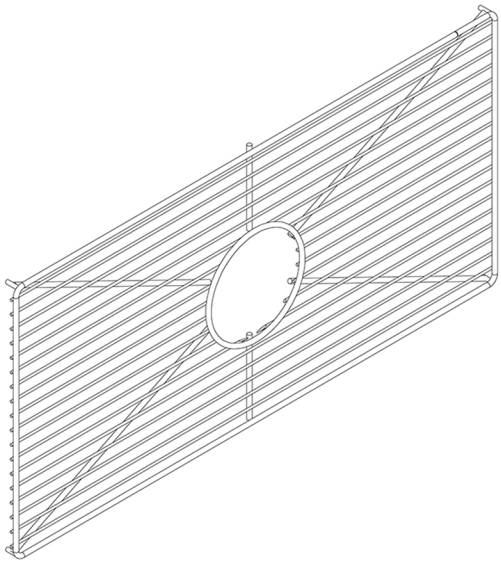

Note: All product dimensions are approximate and should be verified on site prior to installation.
Visit **www.ALFIbrand.com** for more information.

®2017 ALFI brand™ All Rights Reserved. This material may not be reproduced, displayed, modified or distributed without the express prior written permission of the copyright holder.