VIRTUUSA Caroline Avenue 72" GD-50072

-Check your product package for the "list of standard accessories" and make sure all the accessories in the list are included; if there is a defect/missing parts; please contact the local dealer immediately.
-DO NOT let anything sharp puncture, scrape, or scratch the cabinet surface.
-DO NOT leave any part of the cabinet under direct sunlight; it will cause partial aberrations in the cabinet color.
-DO NOT place hot items on the surface of cabinet directly; insulate with a cushion, if needed.
-DO NOT expose the surface of the cabinet to corrosive liquids, such as:
alcohol, banana oil, gasoline, nail polish, acids, alkali, etc.

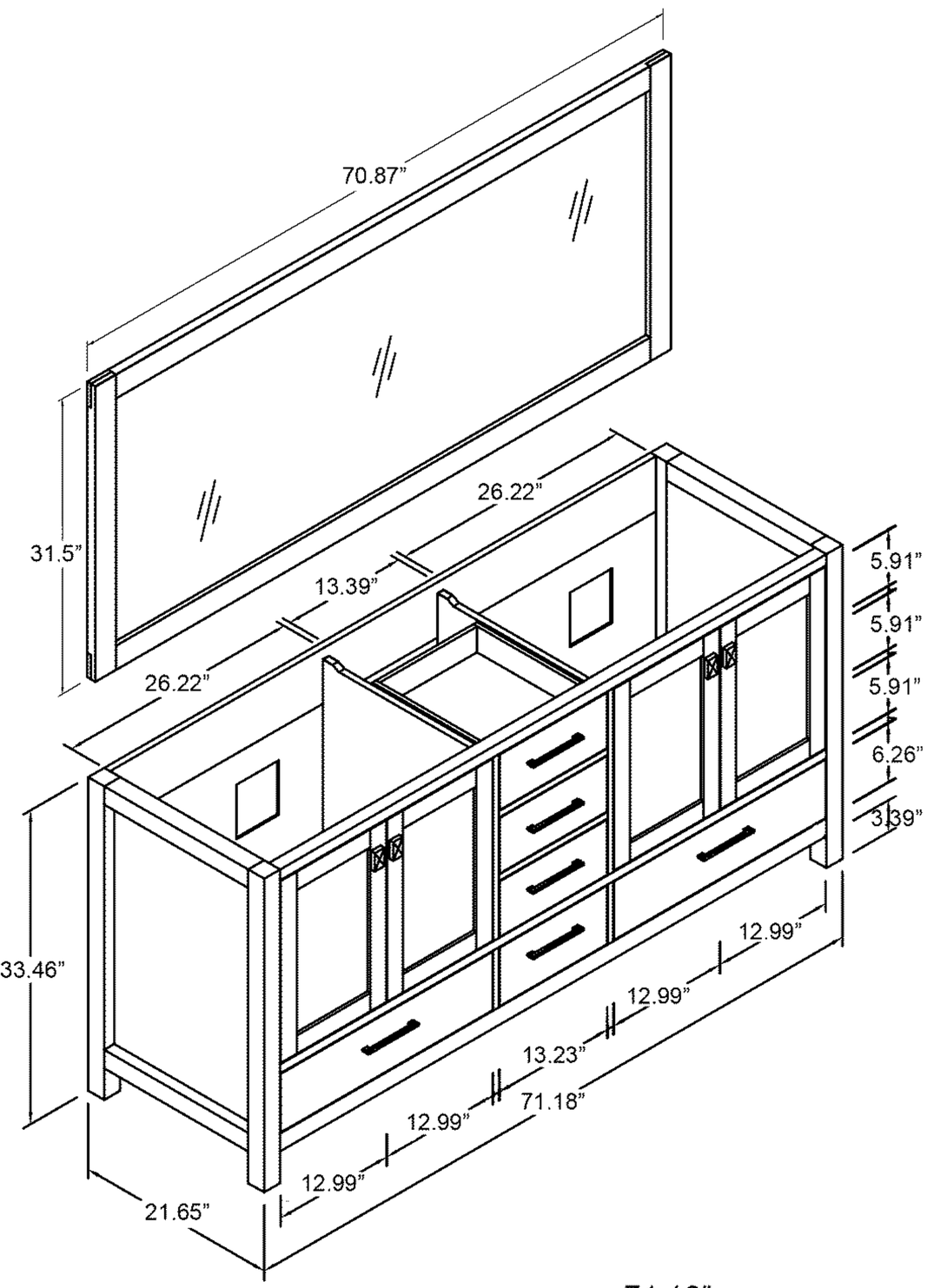

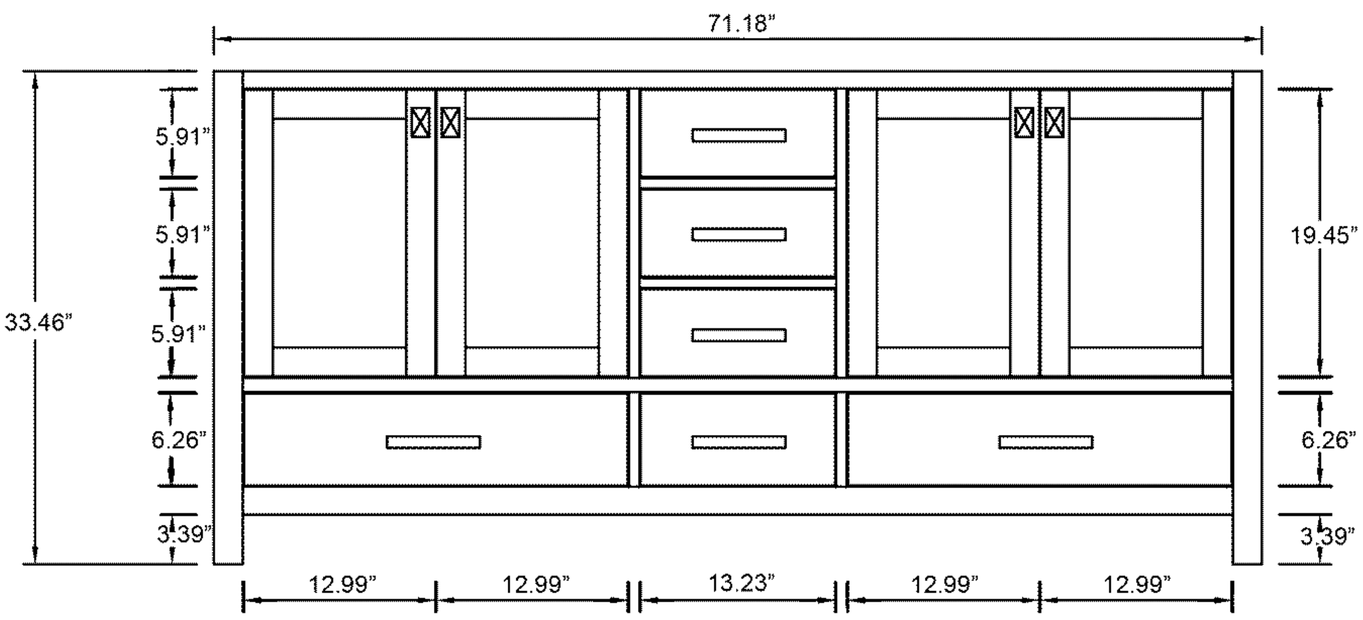

Front View

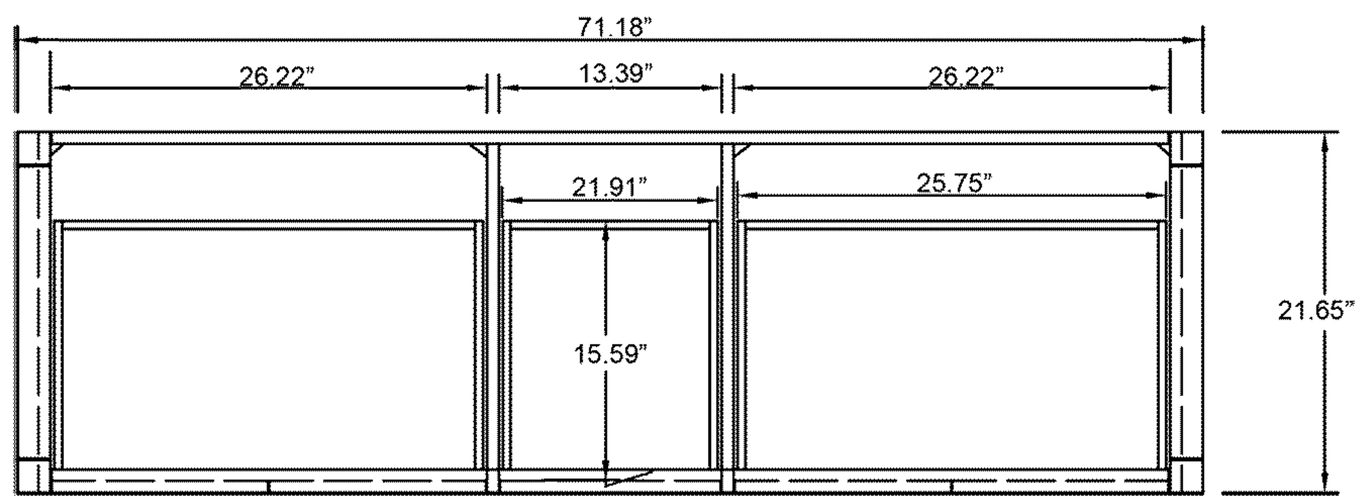

Top View

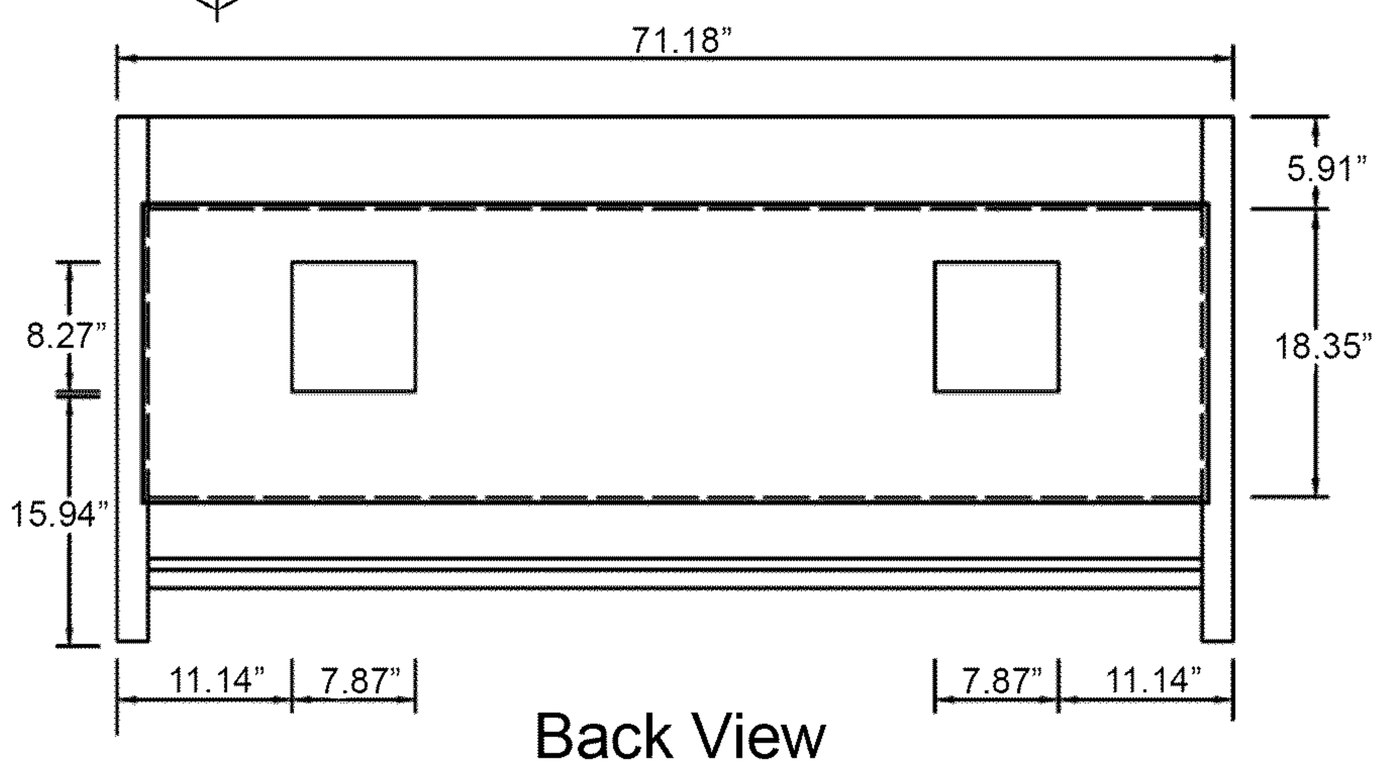

Back View

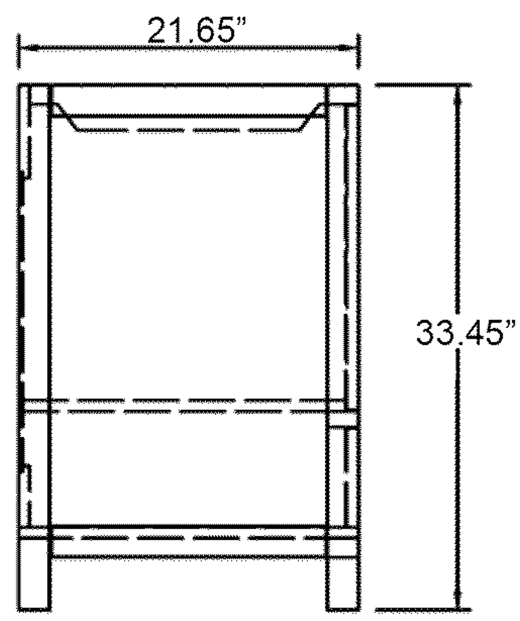

Side View

Virtu USA vanities are hand-crafted and may vary with a minor manufacturing tolerance.
Natural stone characteristics are very subjective and
may vary with natural veining, crystallization and lining.