FINE FIXTURES

206 wembly Road.
New Windsor, NY 12553
Phone: 718.602.6060
Fax: 718.963.2082
info@finefixtures.com
www.finefixtures.com

DIMENSIONS/TECHNICAL DATA

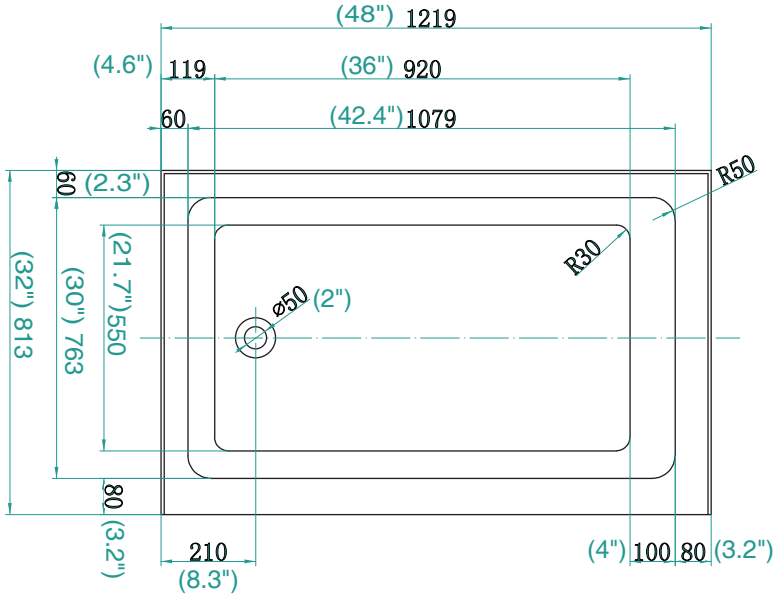

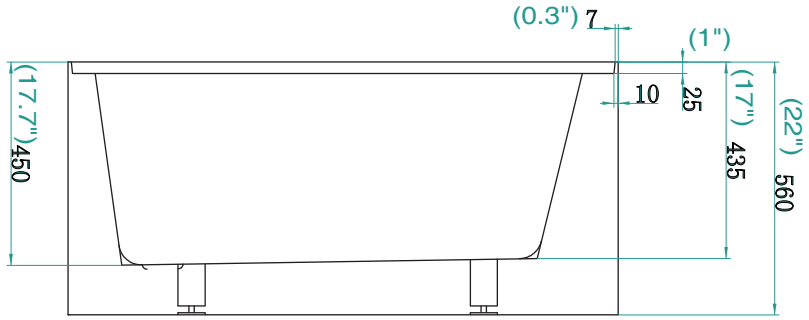

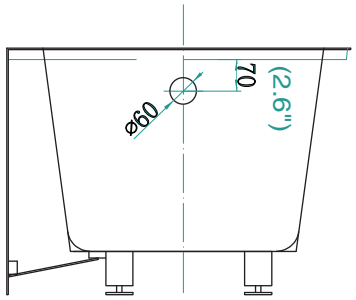

Fatures

•Available in left and right-hand installation options.

•4 different sizes in both left & right-hand installation.

•High-gloss acrylic with fiberglass reinforcement.

•Integral apron with clean, traditional styling

•Sloped lumbar support for more comfortable bathing experience.

•For recessed installation

•Pre-leveled tub bottom for easier installation

•Fixed tile flange prevents water from seeping behind the wall.

•Convenient step-in height.

•Storage ledge for accessibility.

Material

Acrylic bathtub enforced by fiberglass.

•2-3mm acrylic layer, 40%.

•2-3mm fiberglass with resin and stone powder enforcement layer, 50%.

•OSB enhancement layer, bottom side only, 10%.

•cast iron adjustable feet.

ATTENTION! Dimensions may vary by up to 3/8". It is highly recommended to pull all dimensions of actual model for installation and measuring purposes.

TECHNICAL DATA