SIMPLIHOME™
LIFE BY DESIGN

Wyndenhall™ HOME DECOR

brooklyn + max™

TESSA / AVION / LAMBERT

END SIDE TABLE

MODEL # AXCTSA-02

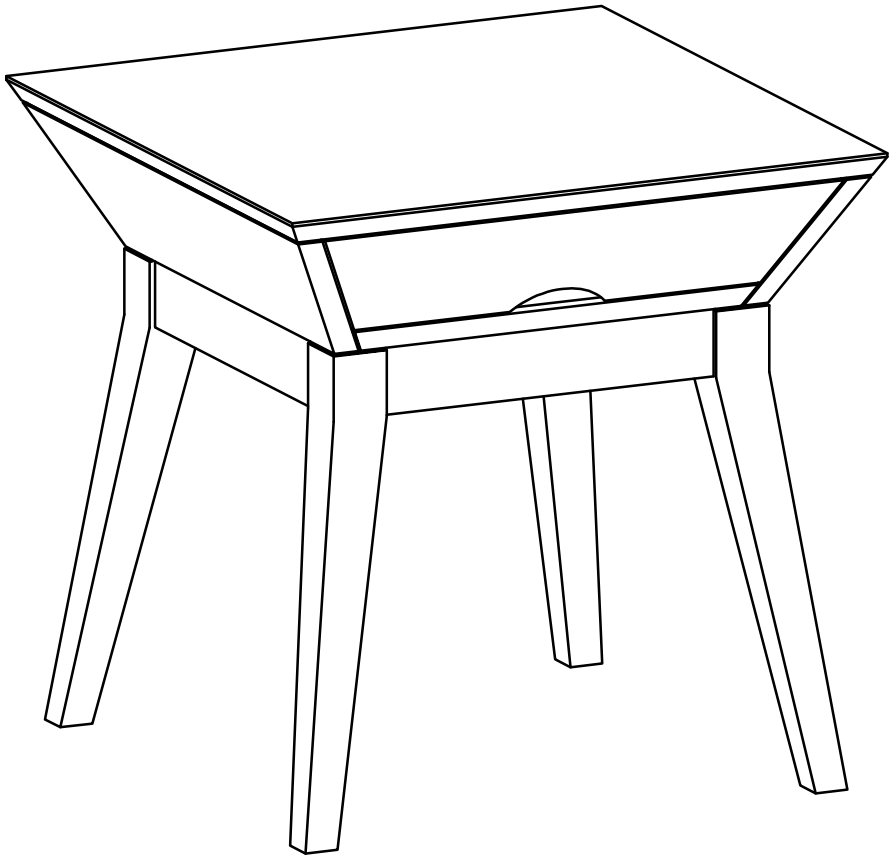

SIMPLI HOME™
LIFE BY DESIGN

Wynden Hall™ HOME DECOR
brooklyn + max™

Questions, problems, assembly help, missing parts?

No need to return the product, we will gladly help and ship your replacement parts free of charge
Please call Customer Service at 1-866-518-0120 ext. 262
Monday to Friday between 9 am –4 pm EST
or go to
www.simpli-home.com/parts request

In order to assist you in a timely manner, please have the following information ready:

Model # _____Part Number or Letter_____

Purchased at _____Date of Purchase _____

If you wish to return the product, please contact the retailer where the product was purchased.

IMPORTANT : Please read this manual carefully before beginning assembly of this product. Keep this manual for future reference.

SAFETY INFORMATION

Identify all the parts and hardware. Do not discard of the packaging until you have checked that you have all of the parts and hardware required. Hardware package may have spare parts.

WARNING: This item contains small parts which can be swallowed by children and pets. Keep children and pets away during assembly. To avoid danger of suffocation, always keep plastic bags away from children and pets. We recommend that you assemble this unit on a carpeted floor to avoid scratches. If using power tools, set the tool to low torque to avoid damage.

May require 2 people for ease of assembly.

IMPORTANT : Keep this manual for future reference.

CARE and MAINTENANCE

Wood Furniture Care

Perhaps the greatest environmental damage to wood furniture comes from wide swings in relative humidity (RH) in our homes. Wood absorbs and desorbs water as relative humidity rises and falls, and in doing so it swells and shrinks. Making matters worse, it expands and contracts unequally along different grain directions. As humidity changes, the components of wooden objects are continually pushing and pulling against each other. This pressure often results in parts of furniture no longer fitting together closely or becoming distorted or breaking from their own internal stresses.

The response to relative humidity changes begins with determining the annual average RH for your particular space. Then try to keep the RH in the space where your furniture is as close to that average as possible, generally within about 10% up or down. De-humidify in the summer and humidify in the winter.

Be aware that raising the temperature lowers the humidity and vice versa. Thus, modern heating systems, which can drive down interior RH in the winter, almost invariably cause problems for furniture. To counteract their effect, you can either modify the RH by keeping furniture containing spaces cooler in the winter or most importantly, have a good working humidifier for your home. A humidistat automatically works to balance the humidity in your home so it is constant. Dry indoor air can suck enough moisture from its surroundings to do permanent damage to wood, causing it to crack or split.

Remember, that not all woods are created equal. Two factors that help determine how rapidly a wood will lose moisture are pore size and surface hardness. A piece made from a dense and hard wood will dry less rapidly than pieces made from softer woods.

Furniture that is sealed and lacquered will lose moisture more slowly than an unfinished piece while pieces with veneer finishes are not only stronger, but lose moisture more slowly than other finishes.

To help protect your wood furniture, take these steps:

- Use a humidifier, preferably one with an automatic control system that can sense the humidity level and adjust itself accordingly. Don't over-humidify; that can damage wood by causing it to expand and contract.
- Keep furniture out of direct sunlight, which can cause it to dry out, crack and warp.
- If you can avoid it, don't put furniture near heating vents. If you must, keep the piece 3 to 4 inches away from the wall, giving the heat and air space to circulate.
- Dust with soft dry cloth.
- Do not use liquid or aerosol products.
- To avoid marking, do not place rubber ON SURFACE (FOOT PADS, ETC)
- For soil build-up, wipe with damp cloth & dry.
- Do not use abrasive cleaner.

PRE-ASSEMBLY INFORMATION MODEL # AXCTSA-02

PART DESCRIPTION

A

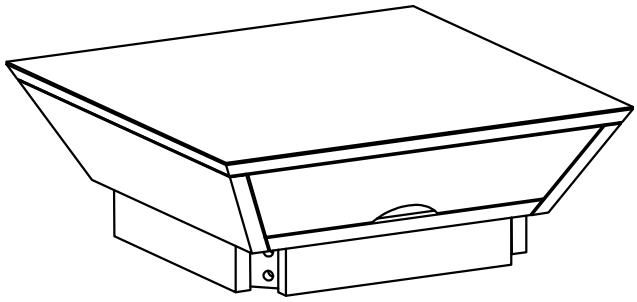

TOP
QTY 1

B

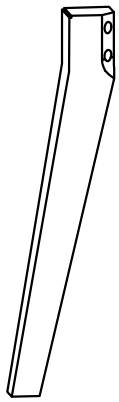

LEG
QTY 4

PRE-ASSEMBLY INFORMATION MODEL # AXCTSA-02

HARDWARE DESCRIPTION

1

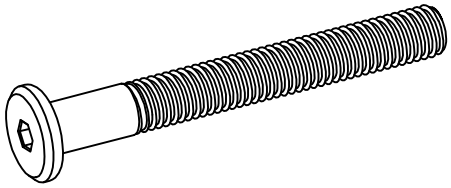

ALLEN KEY BOLTS
M8 x 60 mm
QTY 8

2

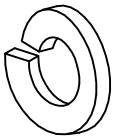

LOCK WASHER
Ø8 / Ø12 mm
QTY 8

3

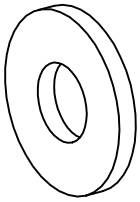

WASHER
Ø8 / Ø19 mm
QTY 8

4

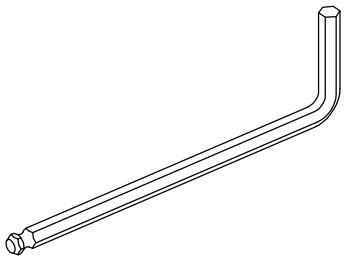

ALLEN KEY
QTY 1

NEED HELP? For help with assembly or if you are missing a part,
Please call customer service at 1-866-518-0120 ext. 262 (9 am to 4 pm EST)

COMPONENTS-KEY DIAGRAM MODEL # AXCTSA-02

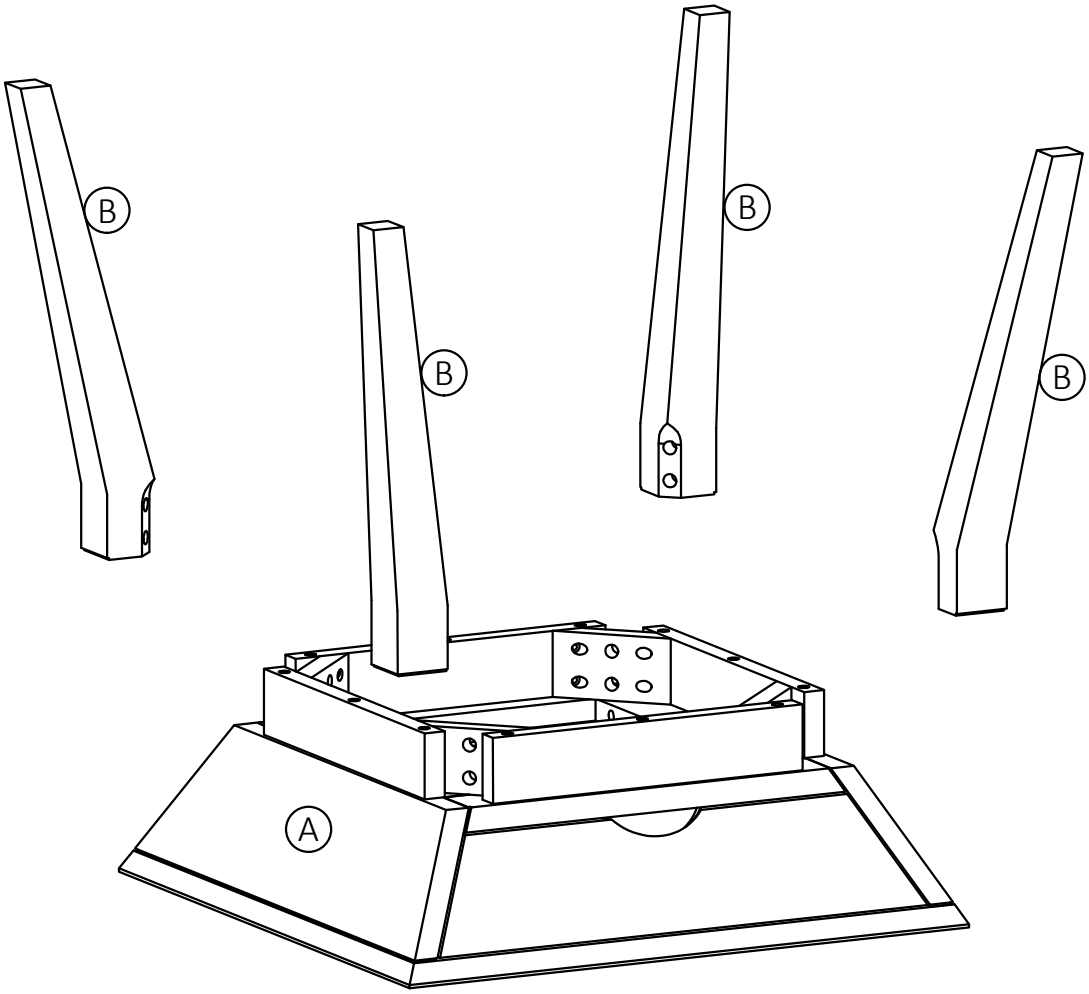

STEP-1

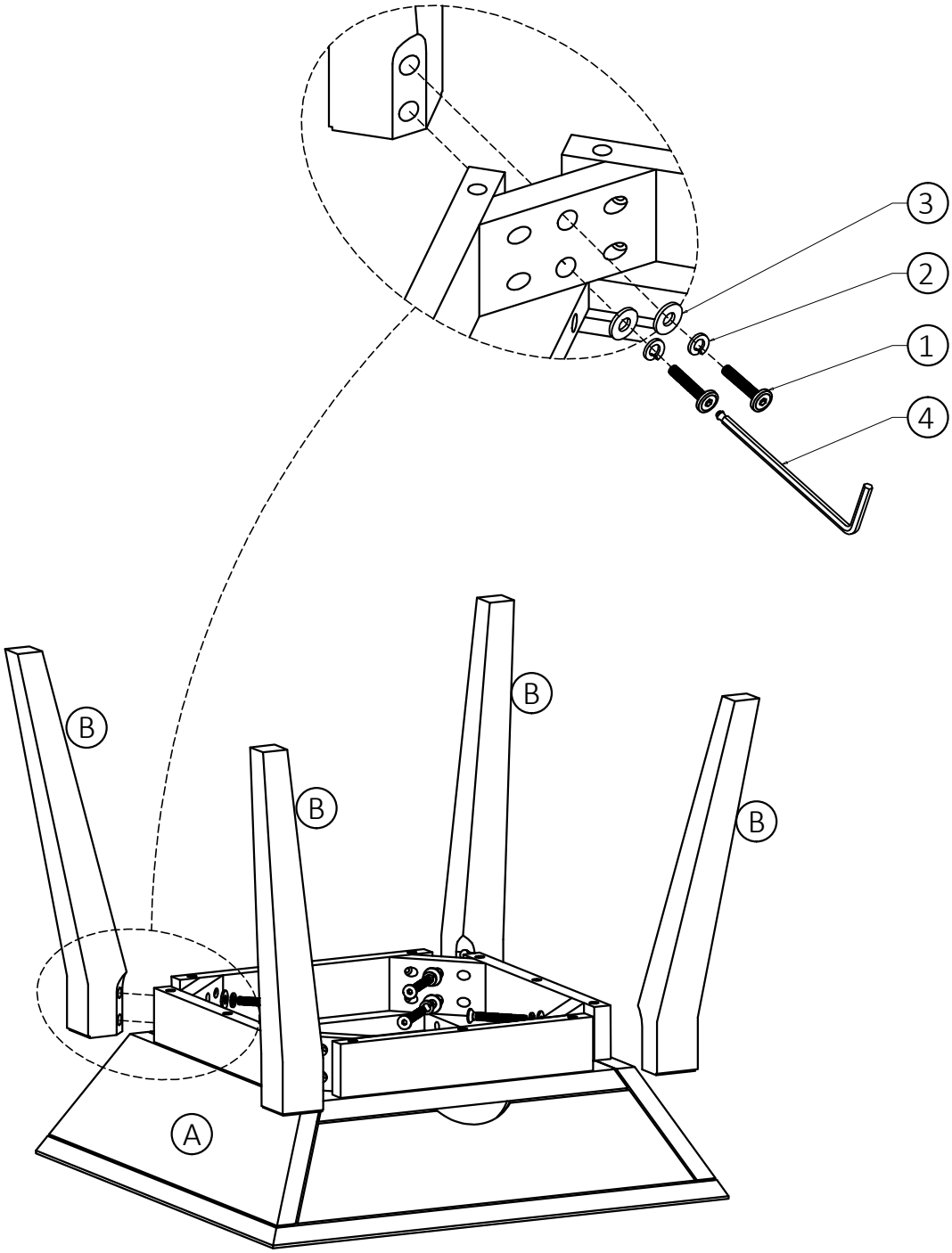

1. Attach Legs Ⓑ to Top Ⓐ.
2. Use eight Allen Key Bolts ①, eight Lock Washers ② and eight Washers ③ to secure part Ⓐ and Ⓑ (two Bolts , two Lock Washers and two Washers on each Leg).
3. Use Allen Key ④ to tighten Bolts. Do not over-tighten.

WARRANTY

Thank you for purchasing a Simpli Home – Wyndenhall – Brooklyn + Max product. These products have been made to demanding, high-quality standards and are guaranteed for domestic use against manufacturing faults for a period of 12 months from the date of purchase. This warranty does not affect your statutory rights.

In case of any malfunction of your product (failure, missing parts, etc.) please contact us at our toll free service line at 1-866-518-0120 ext. 262 from 9 am to 4 pm, Monday to Friday, Eastern Standard Time or by email at **customerservice@simpli-home.com.**

We reserve the right to repair or replace the defective product, at its discretion.

This product is guaranteed for 12 months if used for normal purposes. Any warranty is invalid if the product has been overloaded or subject to neglect, improper use or an attempted repair by other than an authorized agent. Heavy-duty or daily professional/commercial usage are not guaranteed.

Due to continuous product improvement, we reserve the right to change the product specifications without prior notice.