PULSE
SHOWERSPAS
Start your day in a whole new way!

Bonzai ShowerSpa

MODEL #1017-B & 1017-S

GENERAL DESCRIPTION

Packed with features, the Bonzai Shower System will perform to perfection! The 8" rain showerhead easily pivots side to side on an elegantly arched shower arm. Three relaxing body jets with pulsating spray can be angled to hit just the right spots. A five function hand shower completes the bundle by offering an array of patterns to sooth your body. Installation is a breeze… Invigoration is assured!

Designed to install in virtually any shower without remodeling, a typical install is less than 1 hour—even for the do it yourselfer. It simply connects to the water supply at your existing shower arm location and uses your existing hot/cold shower valve.

DOES NOT INCLUDE A MIXING VALVE. PLEASE REFER TO THE TRU-TEMP VALVE, MODEL #3001-RIV-PB.

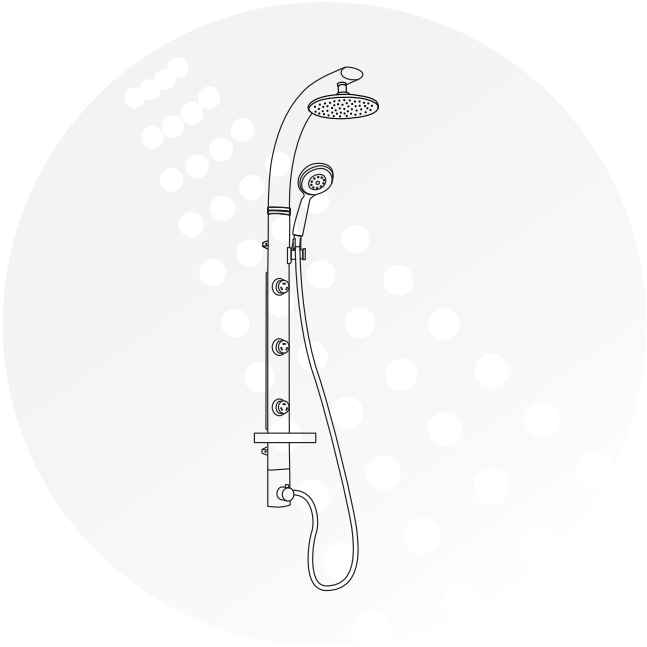

PRODUCT FEATURES

- Surface mounted and completely pre-plumbed, easily retrofit your existing shower without a remodel
- Silver or black aluminum with chrome fixtures
- Rub tips clean with Spray Straight™ technology
- 8" Rain showerhead with soft tips to clear mineral buildup for long lasting performance
- Elegantly arched shower arm pivots side to side
- Five-function hand shower with 59" non-marring hose
- 3 Pulsating body jets provide a soothing spray with adjustable positioning
- Brass diverter easily switches functions—place between functions for further enjoyment
- Convenient shelf for shower products
- Simply replaces your existing showerhead/shower arm
- Manufacturer's three year limited warranty

SPECIFICATIONS

- ½" NPT Brass nipple connector
- 2.5 GPM/9.5 LPM Shower System
- 2.0GPM/7.6LPM (option available)
- 2.5 GPM/9.5 LPM Shower System

WARRANTY

- Manufacturer's three year limited warranty

INVIGORATE…

DECORATE…

REJUVENATE…

Create harmony and balance via hydrotherapy!
Add style, convenience & function to your shower!
There's no better way to start your day!

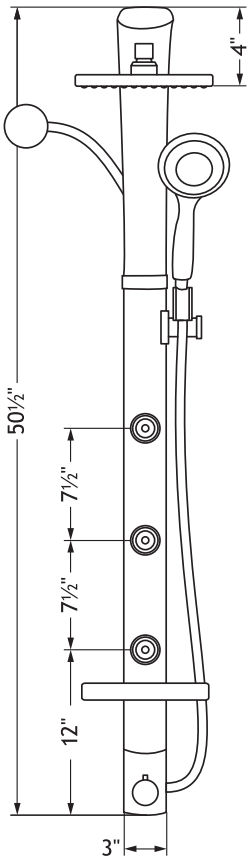

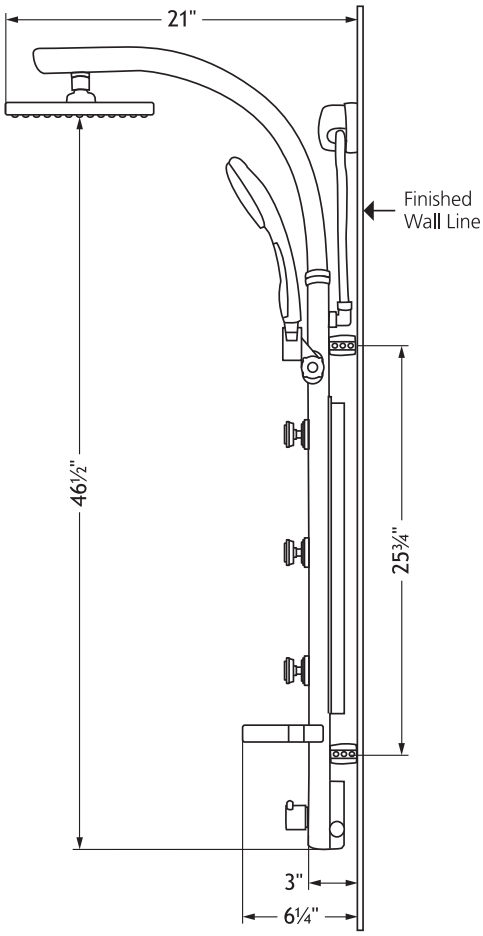

Measurements shown are for reference only
Rev. 2/2016

TO ORDER PARTS CALL 1-888-PULSE-20
www.pulseshowerspas.com