CRS-236C

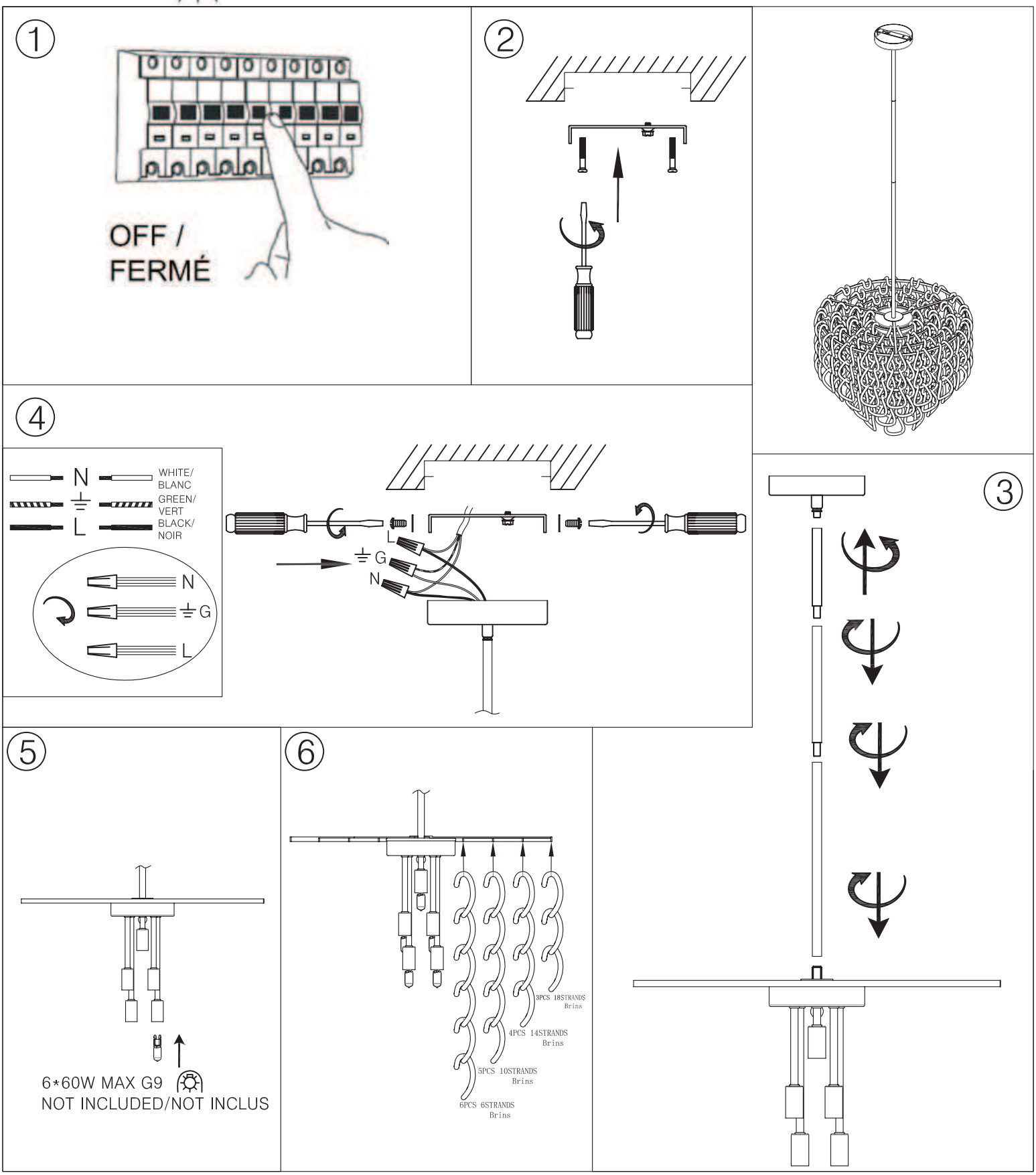

1401 Courtney Park Drive East, Mississauga,Ontario,Canada L5T 2E4
Tel:(905)564-1262 Fax:(905)564-1299 Email:dainolite@dainolite.ca Web:www.dainolite.ca

03/2015

CRS-236C

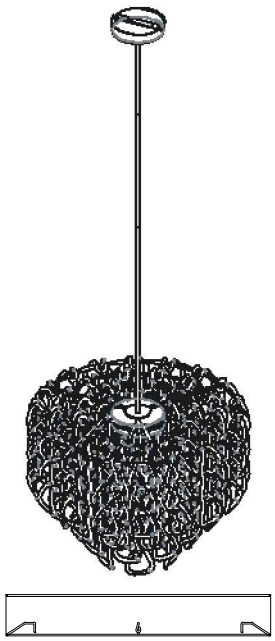

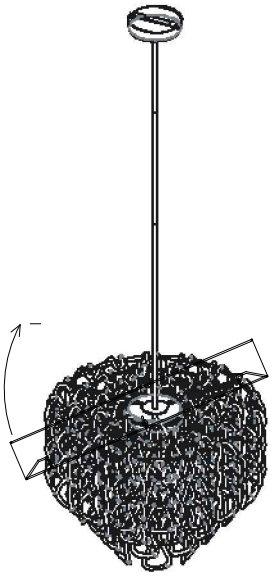

7

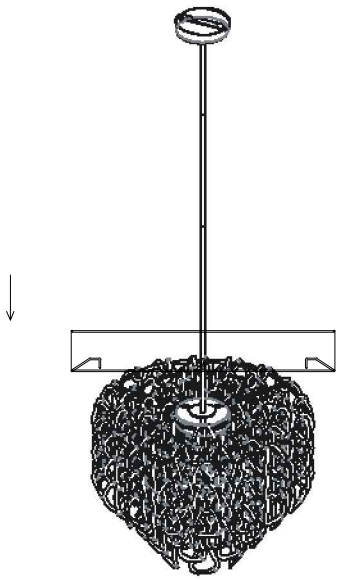

8

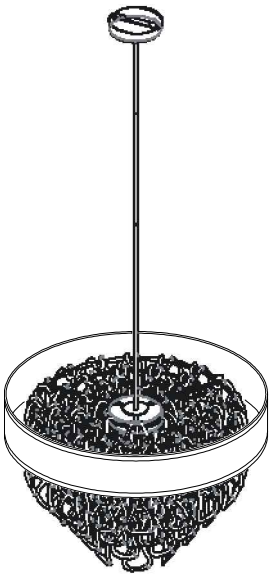

1401 Courtney Park Drive East, Mississauga, Ontario, Canada L5T 2E4
Tel: (905) 564-1262 Fax: (905) 564-1299 Email: dainolite@dainolite.ca Web: www.dainolite.ca

03/2015