Altair Isla Vanity Collection 538042-CB-AW-NM

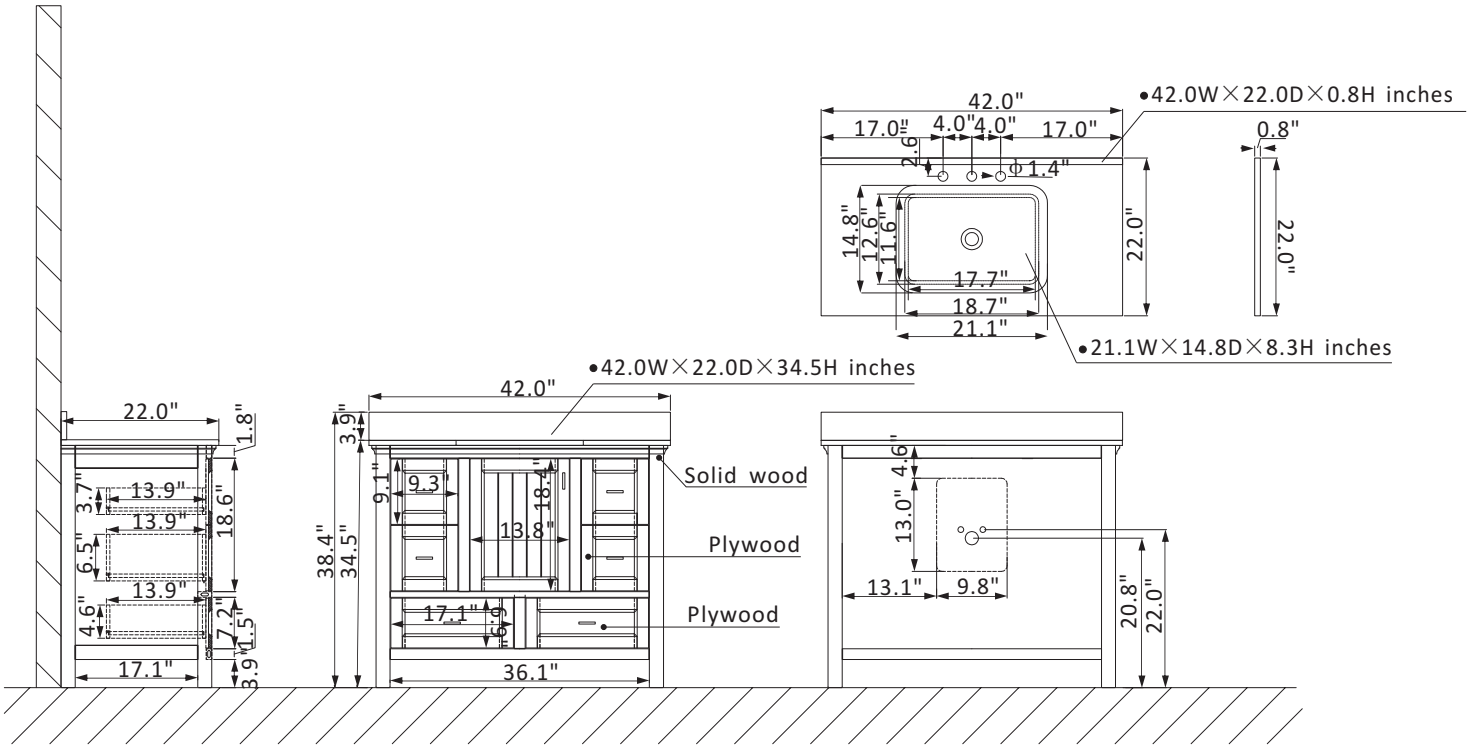

Features

Construction: Solid wood / plywood
Finish: Classic Blue Finish or Gray Finish
Countertop: Artificial Carrara White Stone Countertop with backsplash
Sink: Rectangular, undermount ceramic basin with overflow included
Faucet: Vanity top with pre-drilled 8" widespread faucet hole
Door/Drawer: 6 soft-closing drawers (4 small, 2 large) and 1 soft-closing door
Hardware: Brushed copper finish hardware
Installation: Easy plumbing and faucet installation*

* Does not include faucet, drain assembly, or P-trap

ALTAIR
FASHION BATHROOM LIFE