ITEM NO.	P/N	DESCRIPTION	QTY.
1	BPDT	BASE	2
2	NKSL-58	Support	2
3	NKSL-78	Neck	2
4	HB1T-1	Neck Support	2
5	BLDT1T-34	End Ball	2
6	BKSHV	Lock	2
7	GLBV-24	Glass	1

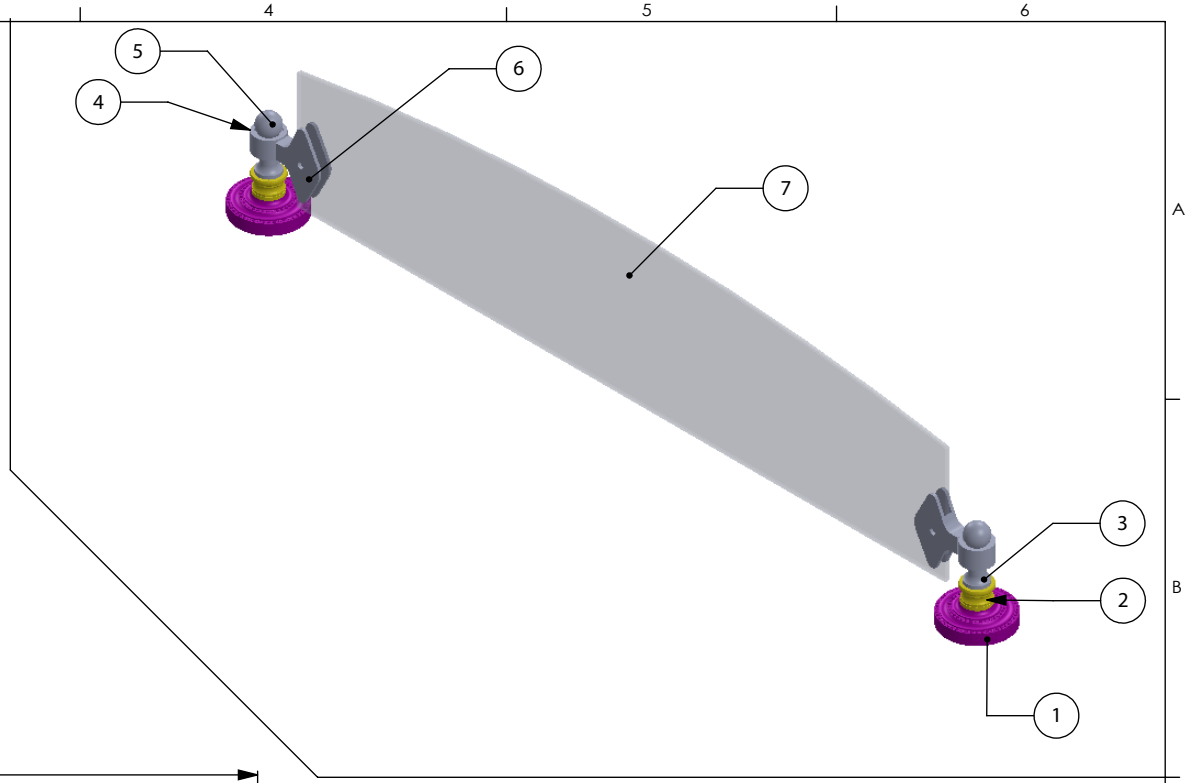

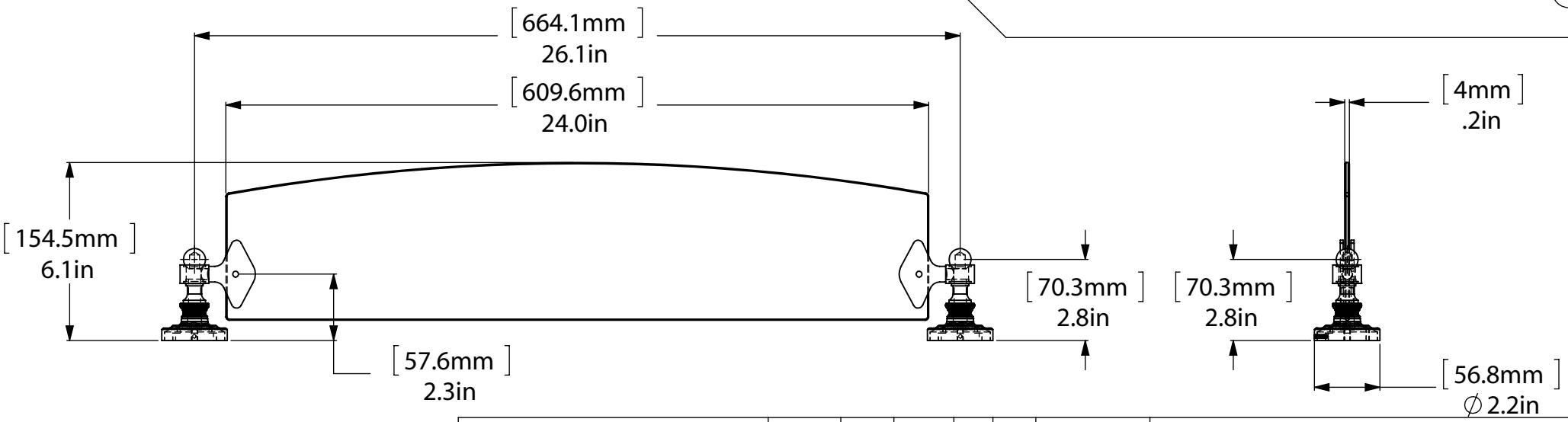

CONFIDENTIALITY/LIMITED LIABILITY STATEMENT
This document (and any files attached to it) is confidential and intended only for the person or entity to which it is delivered. If you are not the intended recipient, then you have received this document by mistake and any use, dissemination, forwarding, printing or copying of this document and its file attachments is prohibited. Please notify ALLIED BRASS INC. immediately either by telephone or by email, delete the misdirected document from your system and destroy any copies you have made of it. We do not accept any liability for any loss or damage which may arise from your receipt of this document.

UNLESS OTHERWISE STATED

DO NOT SCALE DRAWING
CHAMFER ALL EDGES 0.5X45°
DRAWING ISO
FIRST ANGLE PROJECTION

X.XXX	+/-0.025
X.XX	+/-0.1
X.X	+/-0.25
X	+/-0.75
ANGLES	
X.XX	+/-0.05°
X.X	+/-0.1°
X	+/-0.5°
MACHINED FINISH	3.2

	INITIALS	DATE	ITEM	QTY	DRG/PART NO	CLIENT:		
DESIGNED		IJM	MATERIAL	BRASS	WEIGHT		FINISH	TBD
DRAWN		IJM	HEAT TREAT	NA			QUANTITY	
CHECKED		R. ANDRIS	CUSTOMER		CUSTOMER No		---	
PROJ.ENG			DESCRIPTION:				DRAWING No.	REV
SAFETY							DT-33-24	0
APPROVED		R. ANDRIS	DT-33-24					
FILENAME	DT-33-24						SCALE 1:5	SHEET: 01 A4

ALLIED BRASS INC