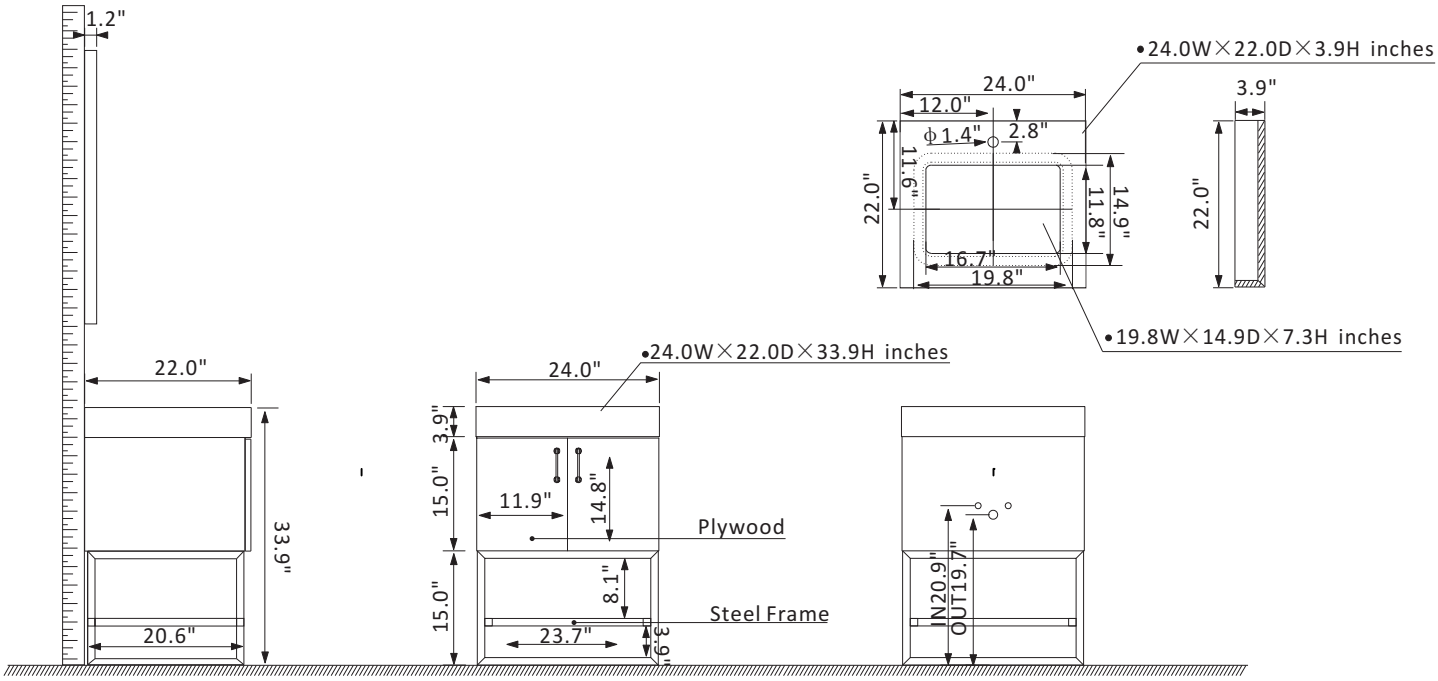


## Features

Wood: Solid wood and plywood construction
North American oak finish
White grain stone countertop
Rectangular undermount white ceramic sink with overflow included
Two soft-closing doors
Brushed gold-finish hardware
Brushed gold metal bracket support base and the open type fixed shelf
Built-in UL-listed power and USB outlet
Single faucet hole, pre-drilled
Installation: Easy plumbing and faucet installation*

* Does not include faucet,drain assembly,or P-trap and backsplash,
Bathroom Storage(Side cabinet)