CHEVIOT PRODUCTS INC.

## Model # 5127

**INSTRUCTIONS**

1. First check to see that the brass shanks are installed in the mounting legs. Next place mounting legs on the tub, then tighten the lock nuts from underneath.
Water supply lines are to be connected to bottom of mounting legs using teflon tape.

2. Install the faucet body by connecting the 3/4” end nuts on the back of the faucet body to the top end of the mounting legs. Be sure that the rubber washers are installed, and tighten the nuts down with a wrench. (Careful not to damage the finish of the faucet. Use a piece of cloth between the finished surface and the wrench)

3. Install the hand shower cradle on to the top of the faucet body. Place the rubber washer in the hex nut at the base of the cradle and tighten until sealed and secure.

4. To install the shower hose place the 1/2” rubber washers in the cone nuts at both ends of the shower hose. Install one end to the side port on the cradle stand and one end to the bottom of the hand shower. Hand tighten.

5. Once installed, remove aerator and hand shower to flush faucet and water lines. This will remove any debris that may be trapped. Then attach shower head and aerator.

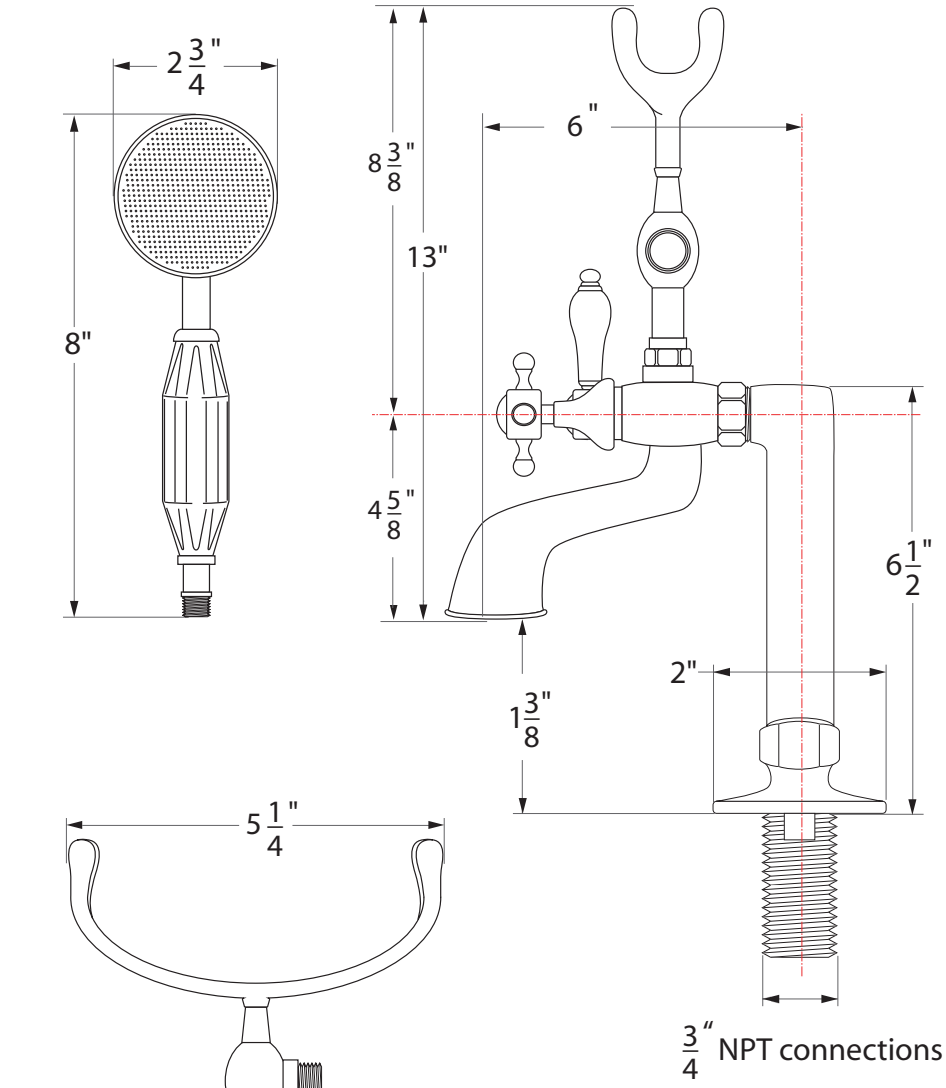


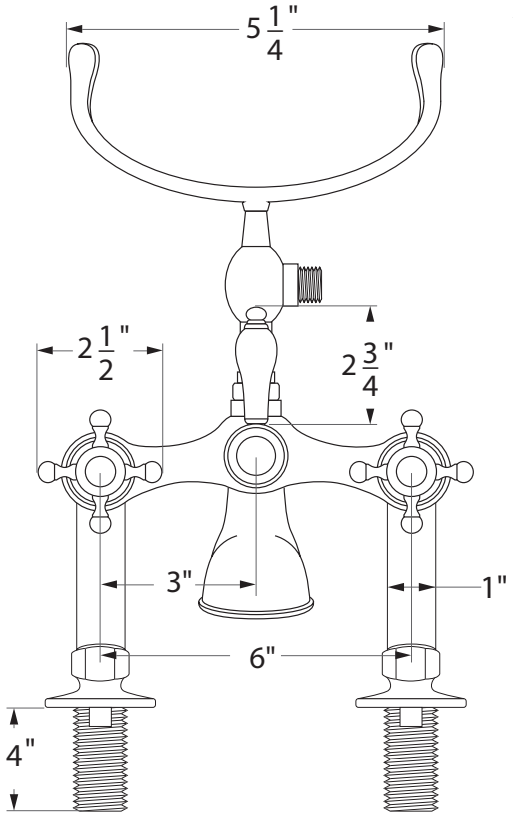


**CARE AND MAINTENANCE**

Minimum Maintenance is required to maintain product finish. With proper maintenance your CHEVIOT Faucet will continually look like new. Special care should be taken when cleaning your faucet and the following suggestions should help extend your faucet life.

a) Cleaning should be done regularly using a soft cotton cloth and warm water, then towel dry.

b) Do not use cleaners that contain abrasives or harsh chemicals; Care should be taken in selecting cleaning supplies. Many cleaners contain detergents, ammonia, or other corrosive solvents that could damage your faucet finish.

c) occasionally clean with a non-abrasive wax polish.

Tel : (800)-444-5969

www.cheviotproducts.com