TALO PARETE ALOGENA SILVER

design : **Neil Poulton - 2002, 2012**
codici : **0613028A**

Artemide

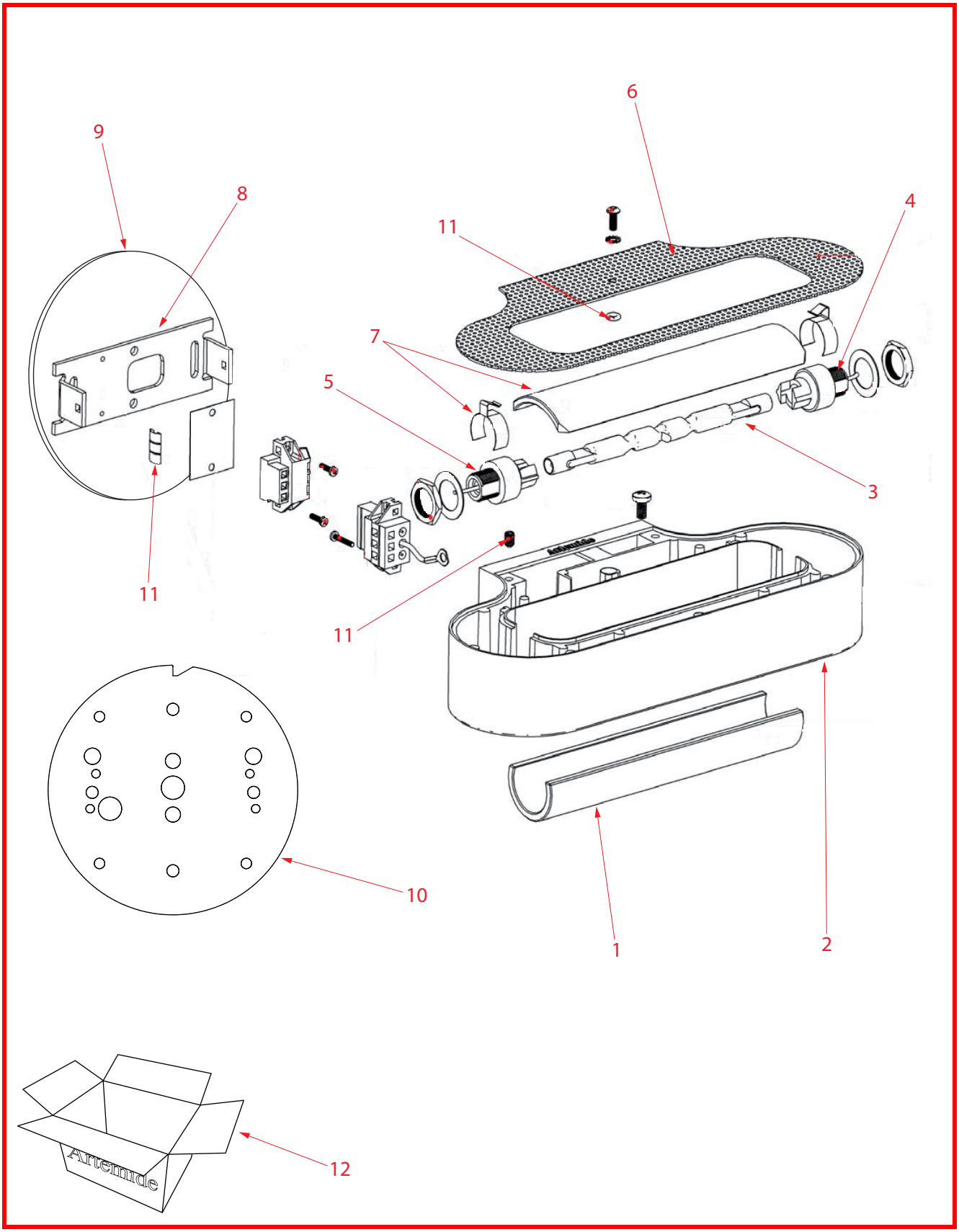

Revisione: Ottobre 2013

Artemide S.p.A.
Via Bergamo, 18
20010 Pregnana M.se (MI) - Italy
tel.02/93518.1 - Fax 02/93590254

cod. foglio ricambi Y503002560

TALO PARETE ALOGENA SILVER

design : Neil Poulton - 2002, 2012
codici : 0613028A

Artemide

Pos.	Codice-Code-Art.nr.-Code-Codigo	Note - Notes - Anmerkungen - Notes - Notas	Q.tà-Q.ty-Menge-Q.té-Cant.
1	Y303000200		1
2	WAC3166		1
3	X111000110		2
4	X112000339		2
5	X112000338		2
6	WAC3162		2
7	WAP3889		1
8	WAC3169		2
9	WAC3737		2
10	WAC3743		1
11	R304210		1
12	Y508000993		6
13			
14			
15			

Revisione: Ottobre 2013

Artemide S.p.A.
Via Bergamo, 18
20010 Pregnana M.se (MI) - Italy
tel.02/93518.1 - Fax 02/93590254