KS7120,1,2,3,5,6,7,8TAL
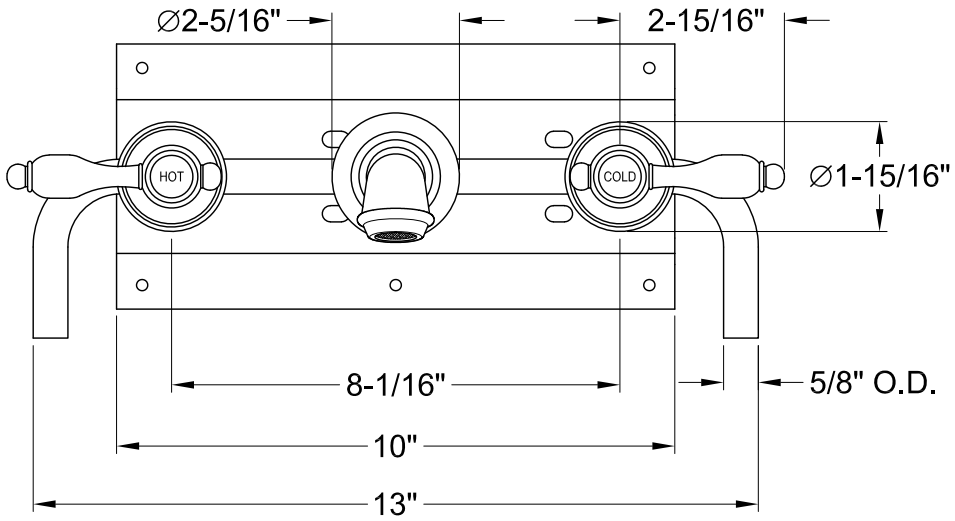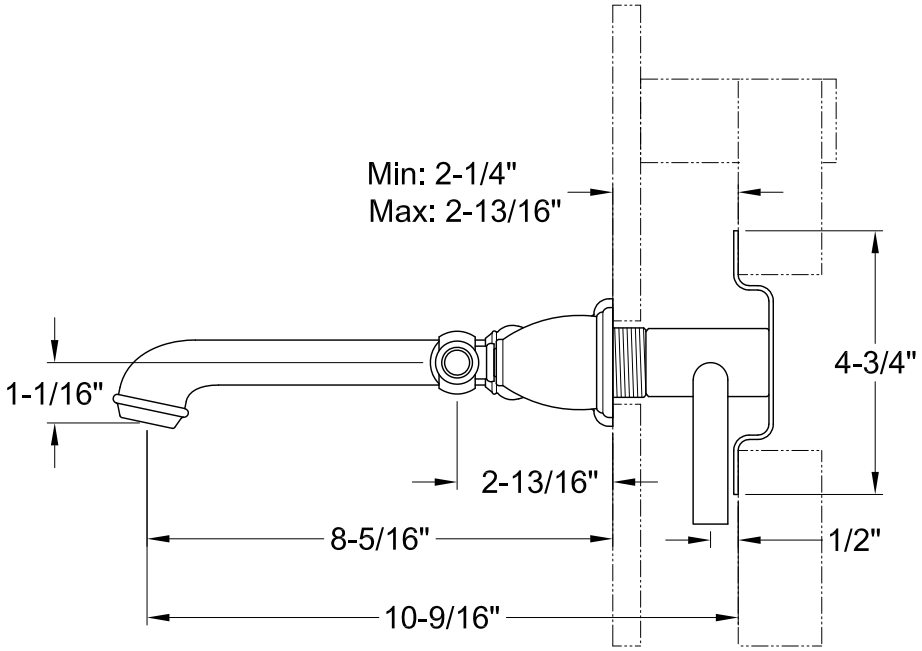
Twin Handles Wall Mount Bathroom Faucet