INSTALLATION MANUAL / MANUAL DE INSTALACIÓN / MANUAL DE INSTALACIQN

VIGO

VIGO Rialto Frameless Hinged Tub Door
VIGO Rialto Puerta de bañera con bisagras sin marco
VIGO Rialto Porte de baignoire à charnière sans cadre

VG6074

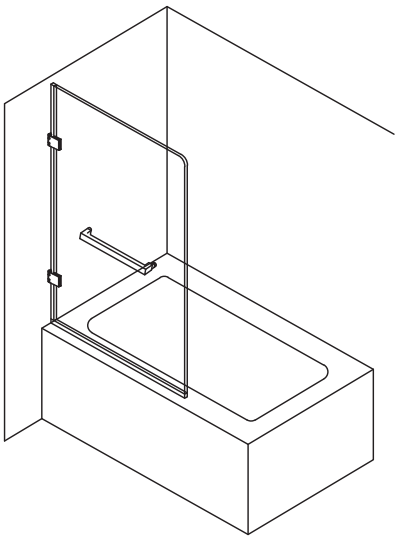

PRODUCT FEATURES / CARACTERÍSTICAS DEL PRODUCTO / CARACTÉRISTIQUES DU PRODUIT

- Strong seal strips along the entire length of the door prevent water from leaking out
- Includes all mounting hardware
- Constructed from ANSI Z97.1 and 16 CFR 1201-certified tempered glass for added safety
- Door effortlessly opens outward on hinges for easy walk-in shower entry
- High-quality stainless steel and solid brass hardware resists corrosion and tarnishing
- All VIGO Shower Doors feature a quality assured Limited Lifetime Warranty

- Fuertes tiras de sellado a lo largo de toda la puerta evitan que el agua se escape
- Incluye todo el hardware de montaje
- Fabricado con vidrio templado con certificación ANSI Z97.1 y 16 CFR 1201 para mayor seguridad
- La puerta se abre hacia afuera sin esfuerzo sobre las bisagras para facilitar la entrada a la ducha a ras de suelo
- Los herrajes de acero inoxidable y latón macizo de alta calidad resisten la corrosión y el deslustre
- Todas las puertas de ducha VIGO cuentan con una garantía limitada de por vida de calidad asegurada

- Des bandes d'étanchéité solides sur toute la longueur de la porte empêchent l'eau de s'échapper
- Comprend tout le matériel de montage
- Construit à partir de verre trempé certifié ANSI Z97.1 et 16 CFR 1201 pour plus de sécurité
- La porte s'ouvre sans effort vers l'extérieur sur les charnières pour faciliter l'accès à la douche à l'italienne
- La quincaillerie en acier inoxydable et en laiton massif de haute qualité résiste à la corrosion et au ternissement
- Toutes les portes de douche VIGO bénéficient d'une garantie à vie limitée de qualité garantie

CERTIFICATE & WARRANTY / •CERTIFICADO Y GARANTÍA / CERTIFICAT & GARANTIE

ANSI 297.1 and 16 CFR 1201-certified glass
All VIGO Shower Door have a Limited Lifetime Warranty

Vidrio certificado ANSI Z97.1 y 16 CFR 1201
Todas las Puertas de Ducha VIGO tienen una Garantía Limitada de Por Vida.

ANSI Z97.1 et 16 CFR 1201 - Verre certifié
Toutes les portes de douche VIGO bénéficient d'une garantie de qualité limitée à vie.

NOTE / NOTA / REMARQUE

VIGO reserves the right to modify/update all hardware and glass components based on bettering the product for the end user's experience. If you have any questions contact VIGO Tech Support at 1-866-591-7792.

*VIGO se reserva el derecho de modificar/actualizar todos los componentes de metal y vidrio con la finalidad de mejorar el producto para la experiencia del usuario final. Si tiene alguna pregunta, comuníquese con el Servicio Técnico de Productos VIGO al 1-866-591-7792

*VIGO se réserve le droit de modifier/mettre à jour tout le matériel et les composants en verre avec l'objectif d'améliorer le produit pour l'expérience de l'utilisateur final. Si vous avez des questions, veuillez contacter le support technique VIGO en appelant 1-866-591-7792.

⚠ SAFETY PRECAUTIONS / PRECAUCIONES DE SEGURIDAD / PRÉCAUTIONS DE SÉCURITÉ

This Installation Guide uses the following symbols to indicate important information. Always observe the instructions indicated by these symbols.

Esta guía de instalación utiliza los siguientes símbolos para indicar información importante. Preste atención siempre a las instrucciones indicadas con estos símbolos.

Ce guide d'installation utilise les symboles suivants pour indiquer des informations importantes. Respectez toujours les instructions indiquées par ces symboles.

⚠ WARNING / ADVERTENCIA / AVERTISSEMENT

Instructions that, if ignored, could result in death or serious personal injury caused by incorrect handling or installation of the product. These instructions must be observed for safe installation.

Instrucciones que, si son ignoradas, podrían provocar la muerte o lesiones personales graves debido una manipulación o instalación incorrecta del producto. Estas instrucciones deben ser observadas para una instalación segura.

Des instructions qui, en cas d'être ignorées, pourraient entraîner la mort ou des blessures graves causées par une manipulation ou une installation incorrecte du produit. Ces instructions doivent être respectées pour une installation en toute sécurité.

⃠ IMPORTANT / IMPORTANTE / IMPORTANT

Maintenance and other important non-personal injury and non-material damage instructions or statements that should be observed.

Instrucciones o declaraciones sobre mantenimiento para evitar daños no personales y no materiales que deben ser observadas.

Des instructions ou déclarations importantes sur l'entretien ou d'autres sujets, qui ne causent pas ni de blessures ni de dégâts non matériels à être observées.

IT IS HIGHLY ADVISED TO DRY FIT THE UNIT PRIOR TO ANY INSTALLATION.
ES SUMAMENTE RECOMENDABLE AJUSTAR LA UNIDAD EN SECO PREVIO A CUALQUIER INSTALACIÓN.
IL EST FORTEMENT CONSEILLE D'AJOUTER A SEC L'APPAREIL AVANT L'INSTALLATION.

REGISTER YOUR PRODUCT
REGISTRAR SU PRODUCTO
ENREGISTREZ VOTRE PRODUIT

In order to activate your warranty, you must register your product.

Es necesario registrar su producto para activar su garantía

Pour activer votre garantie, vous devrez enregistrer votre produit.

vigoindustries.com/register

ACTIVATE NOW
¡ACTÍVELA AHORA!
ACTIVEZ-LA MAINTENANT

VIGO Product Support (866) 591-7792 (Option 2) Monday - Friday 9:30am - 5:30pm EST
Servicio Técnico de Productos Vigo (866) 591-7792 (Opción 2) Lunes a viernes de 9:30am a 5.30 pm EST
Service après-vente VIGO 1-866-591-7792 (Option 2) du lundi au vendredi de 9h30 à 17h30 HNE
vigoindustries.com

MODEL VG6074 RIALTO

VIGO

INSTALLATION INSTRUCTIONS FOR TUB DOOR

PLEASE READ INSTRUCTIONS BEFORE PROCEEDING

Parts List
1. Door (1pc)
2. Hinge (2pc)
3. Side seal strip (1pc)
4. Door bottom seal strip (1pc + 1pc is extra)
5. Handle assembly (1pc)
6. Hex screw 1 5/8" (4pc)
7. Plastic anchor (white) (4pc)
8. Hex screw cover (8pc)

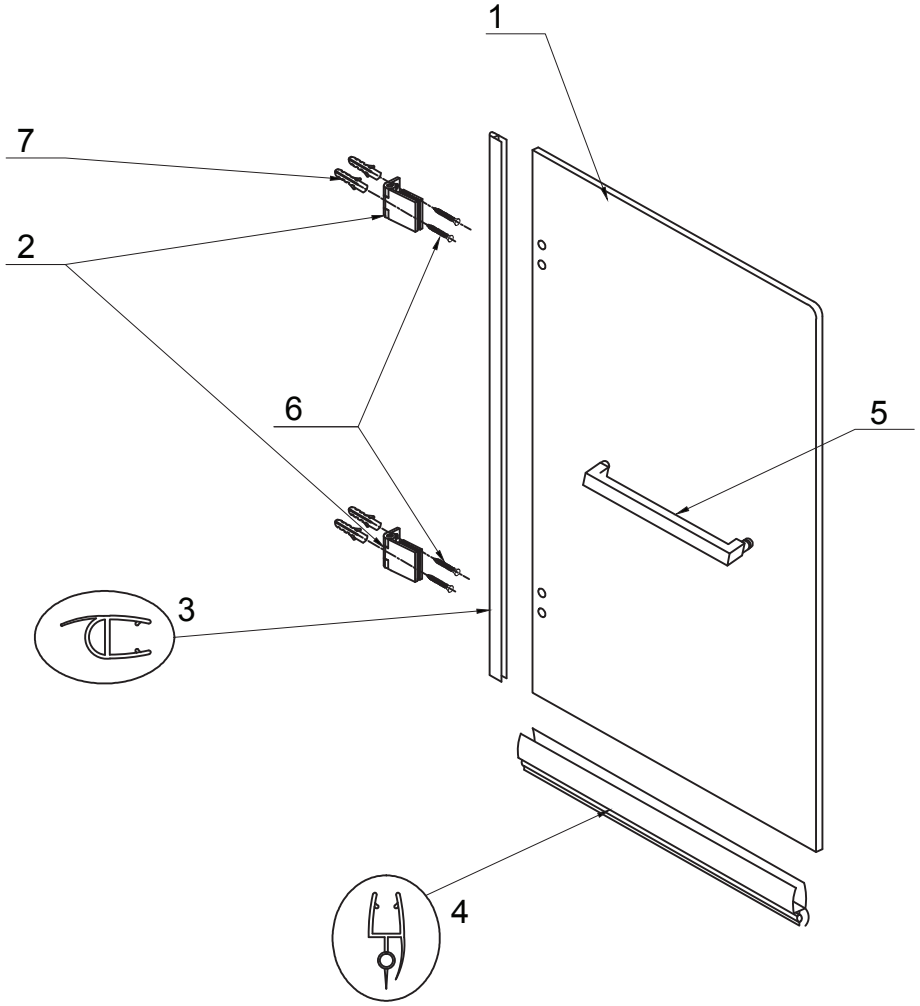

GLASS THICKNESS: 8mm / 5/16"

NOTE: INSTALLATION MUST BE DONE BY A QUALIFIED, LICENSED PROFESSIONAL.

VIGO

1. DOOR 97034-34x58 	2. HINGE ASSEMBLY 98093 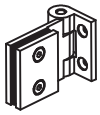	3. SIDE SEAL STRIP WITH FLANGE 96017 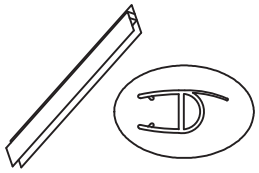	4. DOOR BOTTOM SEAL STRIP 96018 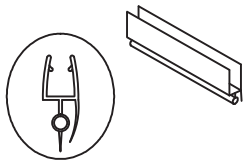	5. DOOR HANDLE 98094
6. HEX SCREW 1 5/8" 98039 	7. PLASTIC ANCHOR 98038 	8. HEX SCREW COVER 96040 		

MODEL	DIMENSION "A"**	HEIGHT**	#3- DOOR (97034)
VG6074	34"	58"	34" X 57 3/8"

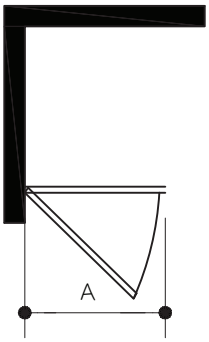

** - WITH HARDWARE
** - EXTERIOR SIZES
"A" DIMENSION WAS MEASURED AFTER TUB DOOR WAS COMPLETELY INSTALLED

Product lines may change, contact your Vigo representative at 1-866-591-7792 or visit our website at www.vigoindustries.com for the most up to date product line information.

MODEL VG6074

VIGO

⚠ **WARNING**

WE STRONGLY RECOMMEND THAT A LICENSED PROFESSIONAL INSTALL THIS TUB DOOR AND INCLUDE THE ASSISTANCE OF A SECOND PERSON TO INSTALL THE DOOR UNIT.

INSTALLATION OF THE TUB DOOR BY AN INEXPERIENCED PERSON MAY RESULT IN GLASS BREAKAGE AND, CONSEQUENTLY, CAUSE PERSONAL INJURY OR DEATH.

- Handle fragile items with care to prevent injury or material damage.
- Glass on panels and doors is tempered glass and must never be cut to prevent personal injury.
- Always rest glass on a level surface

BEFORE STARTING

Compare items on your invoice with what you have received. Carefully review the Parts List on page 2. If any items are missing contact Vigo Industries at 1-866-591-7792. Please check our website at www.vigoindustries.com for additional information or instructional videos.

REQUIRED TOOLS

- Square and/or Phillips #1 and #2 screwdriver
- Flat head screwdriver
- Electric drill plus 1/4" and 5/16" drill bit (depending on wall)
- Level
- Measuring tape
- Pencil (non-permanent)
- Clear silicone caulking
- Utility knife
- Shims (not provided)

IMPORTANT

- Fiberglass, acrylic or sheetrock construction might not be sufficiently strong enough to support the tub door. You should use the wood framing from behind the face edge of the stall to provide a secure mounting to the door. Apply a bead of silicone between the walls and base of the stall.
- For optimum performance, you should install the shower door perfectly level on a level surface.
- When installing use heavy duty gloves.
- FOR THE MATTE GLASS MODELS: Oil secretions from skin will leave transparent spots on the matte side of the glass. Use a degreasing, non-abrasive cleaner to remove these secretions. The same will happen if you get silicone on the matte glass. Use a silicone remover to remove these stains.

⚠ **NOTE: The design of this unit leaves open space in the back of the tub, leaving potential for water leakage.**

IMPORTANT:

THE CLEAR GLASS MODEL HAS A REVERSIBLE DOOR AND CAN BE INSTALLED TO THE RIGHT OR LEFT SIDE. (SEE CONFIGURATION DIAGRAM BELOW)

RIGHT CORNER INSTALLATION

LEFT CORNER INSTALLATION

FIG. 1A (GLASS CONFIGURATION DIAGRAM)

PREPARATION STEPS TO FOLLOW BEFORE INSTALLATION

1. Remove the plastic layer from the base/tub border (if needed). Do NOT remove the plastic layer off the plastic platform of the base/tub.
2. Properly apply silicone to the wall and base joints.

IMPORTANT

- To prevent damage to the finish, you should protect the tub bottom with a cardboard protector before beginning the installation.
- Ensure that there is sufficient structural support behind the shower wall to hold the weight of the tub door. If there is insufficient support, then reinforce the shower walls with wooden studs prior to tub door installation. [SEE FIG.1B] (typical for right and left door installation)

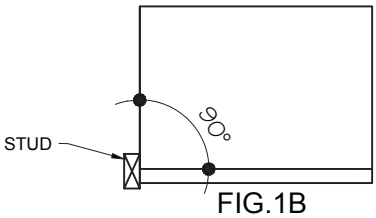

FIG.1B

CAUTION

- **GASKETS NEED TO BE IN BETWEEN ALL GLASS AND METAL CONTACT. FAILURE TO DO SO CAN LEAD TO BREAKAGE AND POTENTIAL BODILY HARM.**

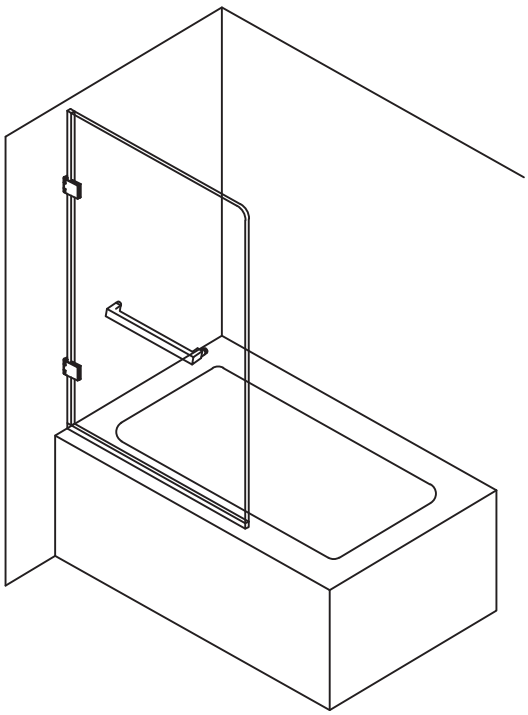

LEFT CORNER INSTALLATION

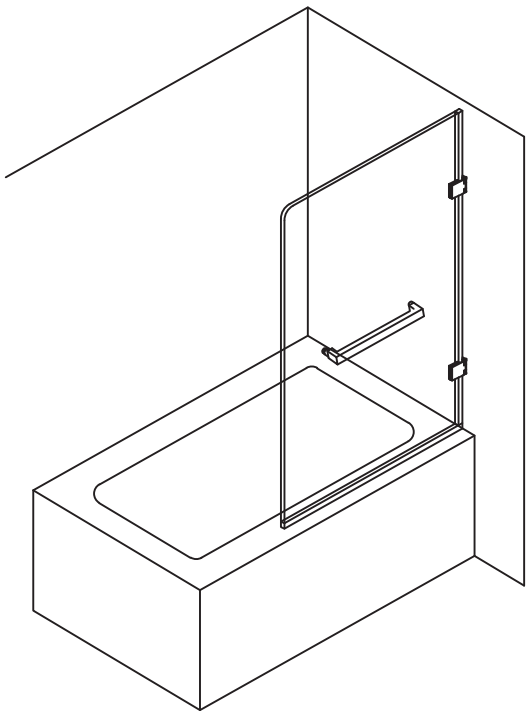

RIGHT CORNER INSTALLATION

INSTALLATION STEPS

A. INSTALLING THE WATER SIDE SEAL STRIP

1. Clean all glass panel edges receiving seal strips with rubbing alcohol. Cut and install the seal strip (#3) according to the seal strip diagram, making sure that the flange is on the inside of the shower.

NOTE: If the seal strips are not flat, use a hair dryer to apply minimal heat and press the seal strip back into position.

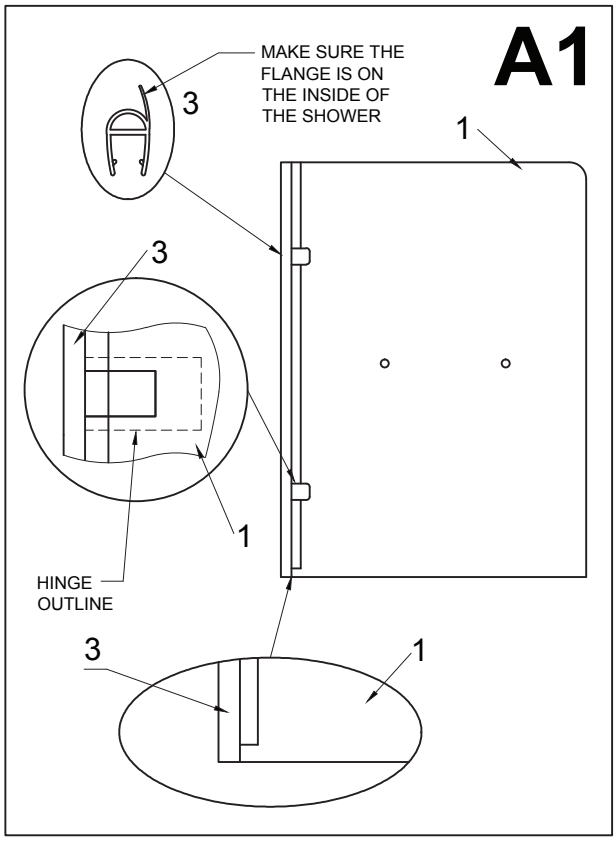

B. HINGE INSTALLATION

1. Clean the glass surface where the hinges (#2) are to be installed with rubbing alcohol. Place gaskets on each side of the door glass panel. Screw the hinges to the door glass panel with the hex key (supplied).

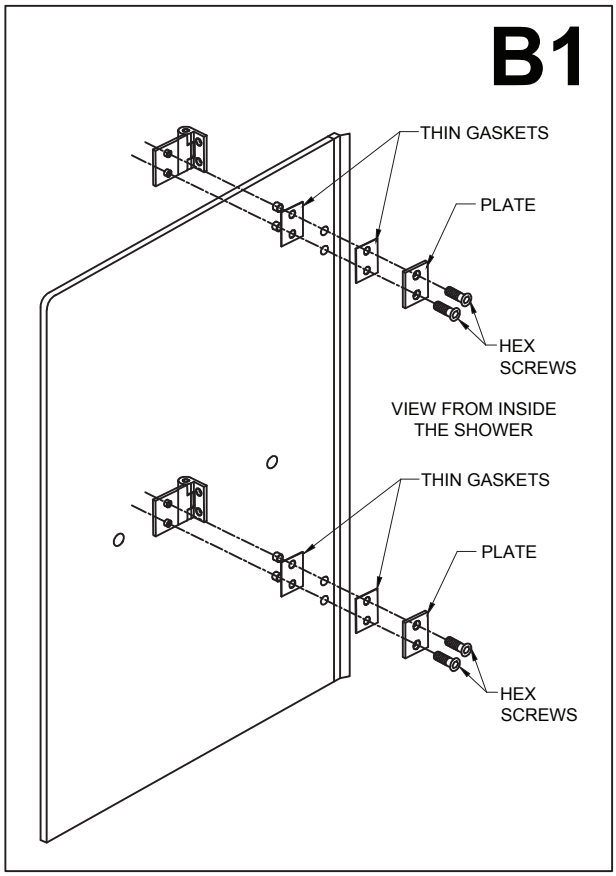

C. INSTALLING THE DOOR

⚠ **WARNING**

DOOR PANEL INSTALLATION REQUIRES TWO OR MORE PEOPLE TO ASSIST

1. Place the door (#1) on the shims raising the door up 7/16" to accommodate the bottom door seal strip.

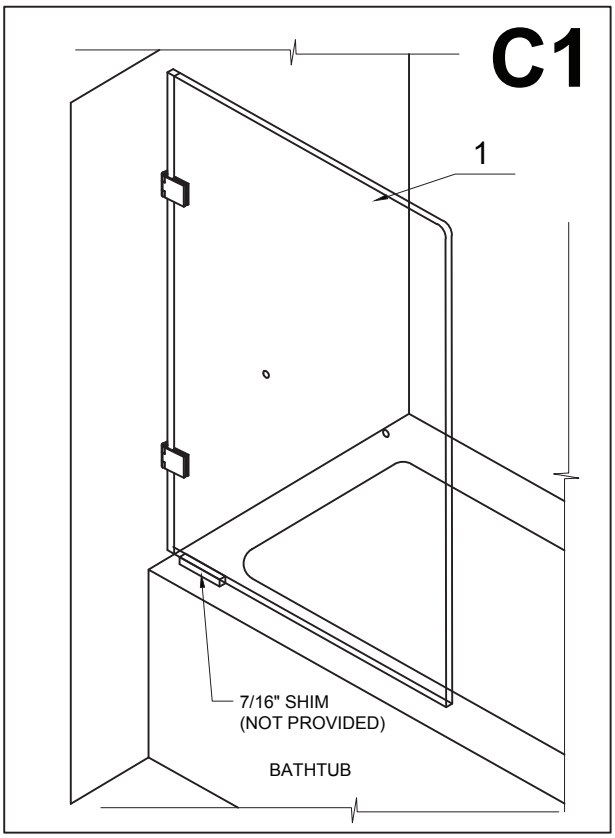

2. Align the door correctly using a level. Mark two (2) holes on the wall for the mounting screws for each hinge.

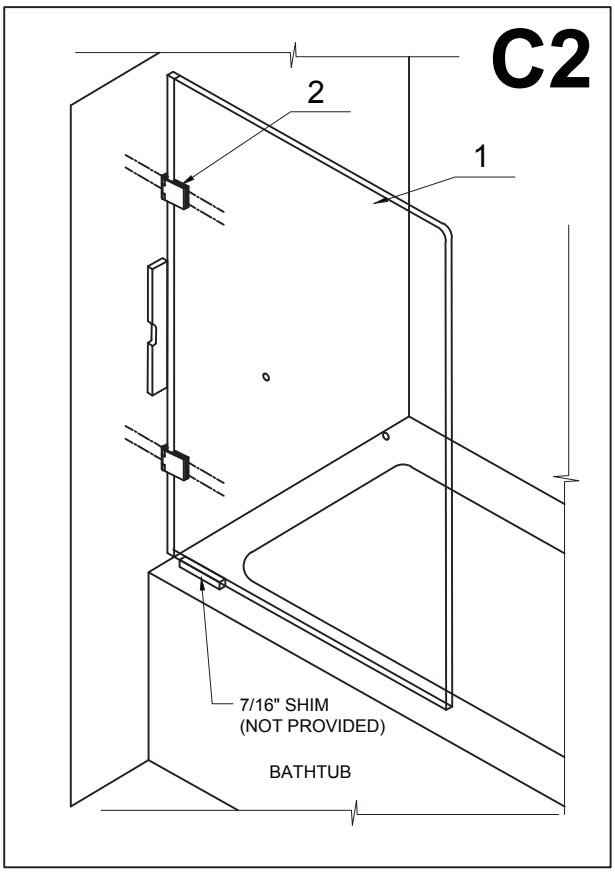

3. Remove the door and drill holes into the wall where marked. Place plastic anchors (#7) inside the holes.

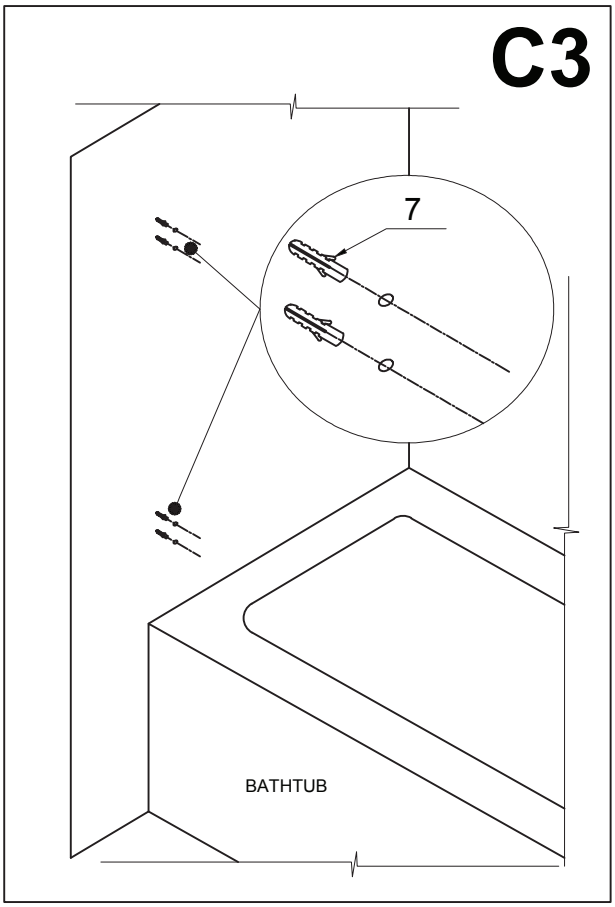

4. Replace the door and screw securely to the wall with 1 5/8" screws (#6).

NOTE - You may need to add more than one shim per hinge as glass hole openings vary during production. PVC shims prevent the door from sagging due to gravity and the weight of the door. ⚠ **Never install without shims, this can cause the glass to break causing property damage and bodily harm.**

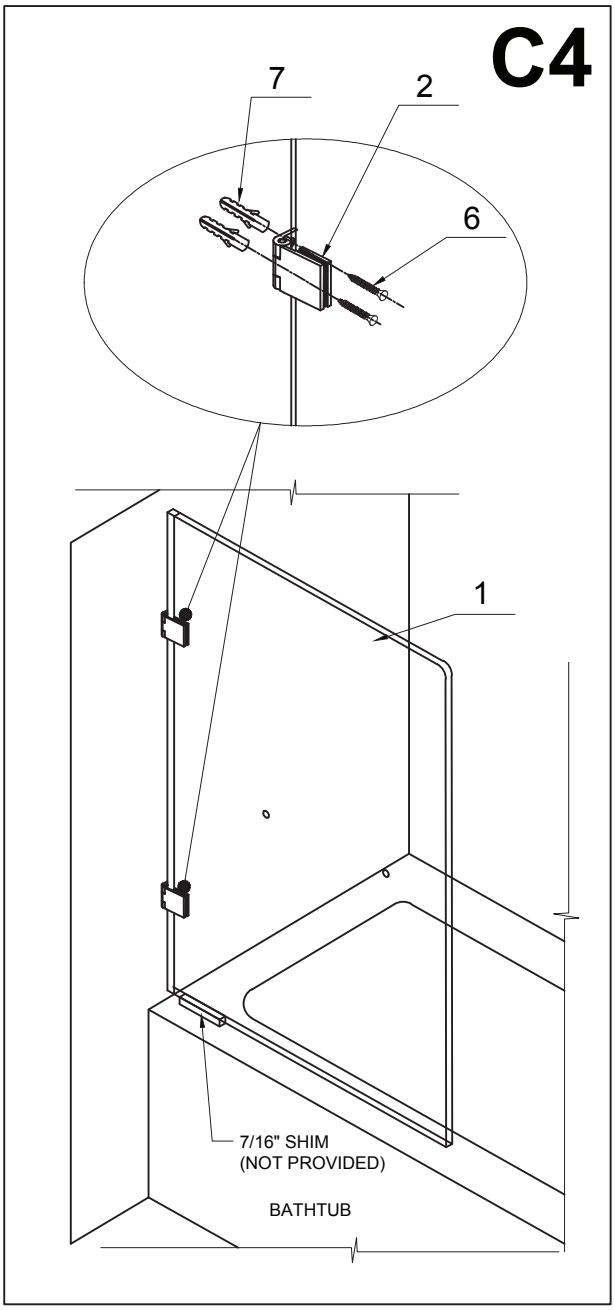

D. INSTALLING THE HANDLE

1. Unscrew the handle holders from the handle assembly (#5). Place the handle to the position on the door. Place plastic washers (supplied) on each side of the door. Tighten the handle holders from inside the shower.

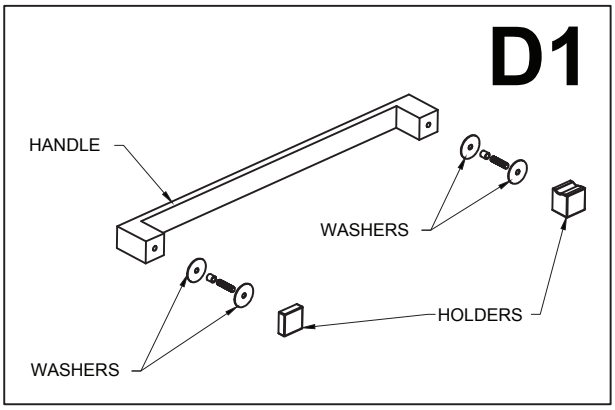

E. INSTALLING THE DOOR BOTTOM SEAL STRIP

1. Clean the door glass panel (#1) edges where the door bottom seal strip (#4) is to be installed with rubbing alcohol. The door bottom seal strip (#4) is cut already to the proper size. Verify that the lip of the seal strip faces toward the inside of the shower cabin before seal strip installation. Install the seal strip according to the diagram.

NOTE: If the seal strips are not flat, use a hair dryer to apply minimal heat and press the seal strip back into position.

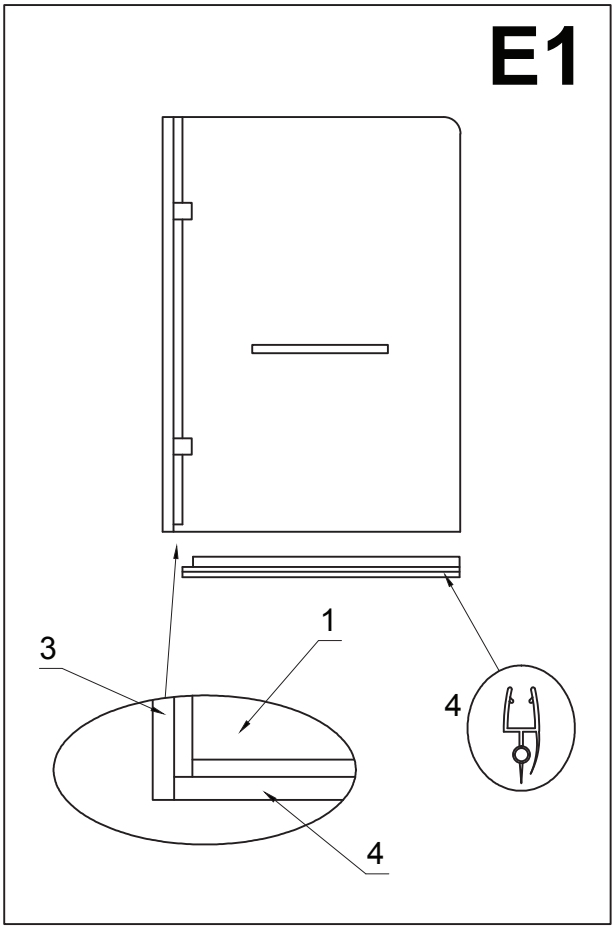

F. INSTALLING THE HEX SCREW COVERS

1. Install hex screw covers (#8) to the hex screws that mount the hinges (#2).

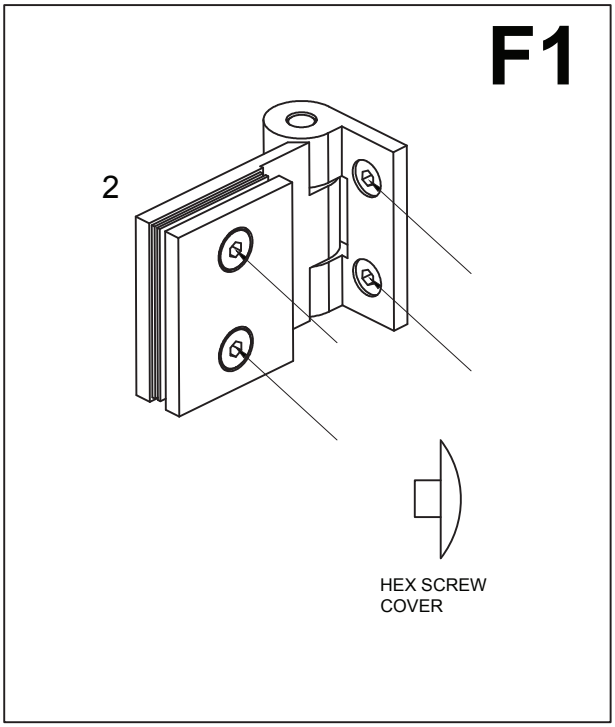

⚠ IMPORTANT

- WAIT 24 HOURS BEFORE USING SHOWER
- DO NOT ALLOW WATER TO DIRECTLY HIT DOOR SEAL STRIPS.

CLEANING INSTRUCTIONS FOR THE TUB DOOR

1. Use a mild liquid household cleaner to keep metal surfaces bright and clean. Rinse well and dry with a soft, clean cloth.

2. Remove dust with a soft, damp cloth.

3. Use a standard household window cleaner to clean the glass panels.

4. A water beading treatment, similar to what you would use on an automobile windshield, can be used on the inside of the glass to keep it looking brand new.

5. Use rubbing alcohol to clean and remove grease, oil, paint and ink.

6. Should you accidentally scratch or stain your tub door, use a liquid automobile polish to remove.

⚠ IMPORTANT

1. DO NOT use abrasive cleaners, scrapers, metal brushes or any items that could scratch or dull the surface.

2. DO NOT allow surface to come in contact with acetone (nail polish remover), dry cleaning solution, lacquer thinner, gasoline or other similar products.

REGULAR CARE AND MAINTENANCE OF YOUR VIGO TUB DOOR

Your home is a moving entity, shifting and settling over time. Vigo understands this and has designed their tub doors with this in mind. It is the responsibility of the homeowner or end user to maintain the integrity of their newly installed door, using the integrated adjustability features. In order to keep your tub door in optimal working condition, Vigo recommends regularly inspecting your door and tightening any hardware that may have loosened during use. This simple step will insure optimal results from your Vigo tub door for many years to come.

VIGO INDUSTRIES, LLC ("VIGO")
SHOWER ENCLOSURE LIMITED LIFETIME WARRANTY

EFFECTIVE JANUARY 1, 2010

VIGO offers the following limited warranty on each of its Shower Enclosure products* (the "Product") and the components thereof. This warranty extends only to the original owner or end-user for personal household use. For commercial uses, additional limitations apply.

VIGO warrants the structural glass component of the Product to be free from defects in workmanship and materials under normal use and service for the period commencing from the initial date of purchase by the owner or end-user, contractor, or builder, from VIGO or an authorized VIGO dealer, through the lifetime of the original owner or end-user.

VIGO warrants the hardware components of the Product to be free from defects in workmanship and materials under normal use and service for a period of two (2) years from the initial date of purchase by the owner or end-user, contractor, or builder, from VIGO or an authorized VIGO dealer.

VIGO warrants the seal strip components of the Product to be free from defects in workmanship and materials under normal use and service for a period of one (1) year from the initial date of purchase by the owner or end-user, contractor, or builder, from VIGO or an authorized VIGO dealer.

Subject to the Warranty Service provision below, any product reported to the authorized dealer or to VIGO as being defective within the warranty period will be repaired or replaced (with a product of equal value) at the option of VIGO. This warranty extends to the original owner or end-user and is not transferable to a subsequent owner.

Neither the distributor, authorized VIGO dealer, nor any other person has been authorized to make any affirmation, representation, or warranty other than those contained in this warranty. Any affirmation, representation, or warranty other than those contained in this warranty shall not be enforceable against VIGO or any other person.

VIGO reserves the right to modify this warranty at any time, it being understood that such modifications will not alter the warranty conditions applicable at the time of sale of the products in question.

Limitations
This warranty shall not apply to instances of incorrect operating procedures, breakages, or damages caused by fault through improper installation, carelessness, abuse, misuse, misapplication, improper maintenance, or alteration of the Product, as well as chemical or natural corrosion, accident, fire, flood, an act of God, or any other casualty. Avoid abrasive cleaners, steel wools, and harsh chemicals as these will scratch, damage, and / or dull the product and / or finish and void this warranty. The owner/end-user of the Product covered by the present warranty is entirely responsible for its proper installation and any applicable plumbing or electrical wiring. VIGO neither installs nor supervises the installation nor hires a contractor for this purpose; consequently, VIGO cannot be held responsible for any default, breakage, or damages caused thereby or resulting thereof, either directly or indirectly.

The owner/end-user must provide access to the components of the Product as described in the installation guide so that VIGO can execute the warranty specified herein. If such access is not available, all expenses to provide said access will be the responsibility of the owner/end-user.

This warranty does not apply to Products that have not been installed or operated in accordance with instructions supplied by VIGO and all applicable rules, regulations, and legislation pertaining to such installations.

This warranty does not apply unless the VIGO Product is installed by fully insured licensed professionals. Vigo strongly recommends that such licensed professionals have experience in the installation of bathroom and kitchen products. Installation of certain products, including, without limitation, glass products (i.e., shower doors and glass sinks) by an inexperienced person may result in glass breakage and, consequently, cause personal injury or death.

VIGO is not liable for personal injuries or deaths to any persons or for any direct, special, incidental, or consequential damage, loss of time, loss of profits, inconvenience, incidental expenses, labor or material charges, or any other costs resulting from the use of the product or equipment or pertaining to the application of the present warranty, or resulting from the removal or replacement of any product or element or part covered by this warranty.

EXCEPT AS OTHERWISE PROVIDED ABOVE, VIGO MAKES NO WARRANTIES, EXPRESSED OR IMPLIED, INCLUDING WARRANTIES OF MERCHANTABILITY AND FITNESS FOR A PARTICULAR PURPOSE OR COMPLIANCE WITH ANY CODE.

In any case, VIGO cannot be held liable for any amount over and above the purchase price paid for the Product by the owner/end-user, contractor, or builder.

Commercial Limitations
In addition to the above conditions and limitations, the warranty period for products installed for commercial applications or used in commercial ventures is one (1) year from the initial date of purchase by the owner/end-user, contractor, or builder from an authorized dealer. VIGO is not responsible for loss of use or profit under any circumstances. If the product is used as a display, the warranty period begins when the product is placed on display. This warranty gives the owner/end-user specific legal rights. The owner/end-user may also have other rights which can vary from one state or province to another.

Warranty Service
In order to obtain service provided under this warranty during regular business hours, contact the dealer or distributor who sold the unit, or contact VIGO directly. VIGO will provide the warranty service described above when the following conditions have been met: the failure is of the nature or type covered by the warranty; the user has informed an authorized VIGO Agent or VIGO's warranty service department representative of the nature of the problem during the warranty period; conclusive evidence (e.g., proof of purchase or installation) is provided to the foregoing by the user proving that the failure occurred or was discovered within the warranty period; an authorized independent service person or company representative has been permitted to inspect the product during regular business hours within a reasonable time after the problem was reported by the user. VIGOs warranty obligation shall be discharged upon tender of replacement or repair. The customer's refusal to accept the tender terminates VIGO's warranty obligations.

*Certain models are pending approval.
Certification may be ended by VIGO or certification agencies without notice.