ALTAIR
FASHION BATHROOM LIFE

INSTALLATIONS SPECIFICATION

SKU	53263-BAT-MW
Overall Dimensions	63.0"Wx38.6"Dx24.8"H
Inner Dimensions	43.3"Wx22.4"Dx20.5"H
Bathtub Color Finish	White
Water Capacity (to overflow)	105 gallons
Water Depth (to top)	20.5 inch
Water Depth (to overflow)	13.2 inch
Seating Capacity	1 person
Tub Weight	295.4 lbs.
Overflow Height	0.3 inch
Faucet Congurations	No Faucet Drilling
With pop-up drain	Pop-up drain included
Drain & Overflow Color Finish	Matte White

All measurements are approximate.Measurements may vary +/1/2".

Vespa

63.0"x38.6"

Solid Surface Bathtub

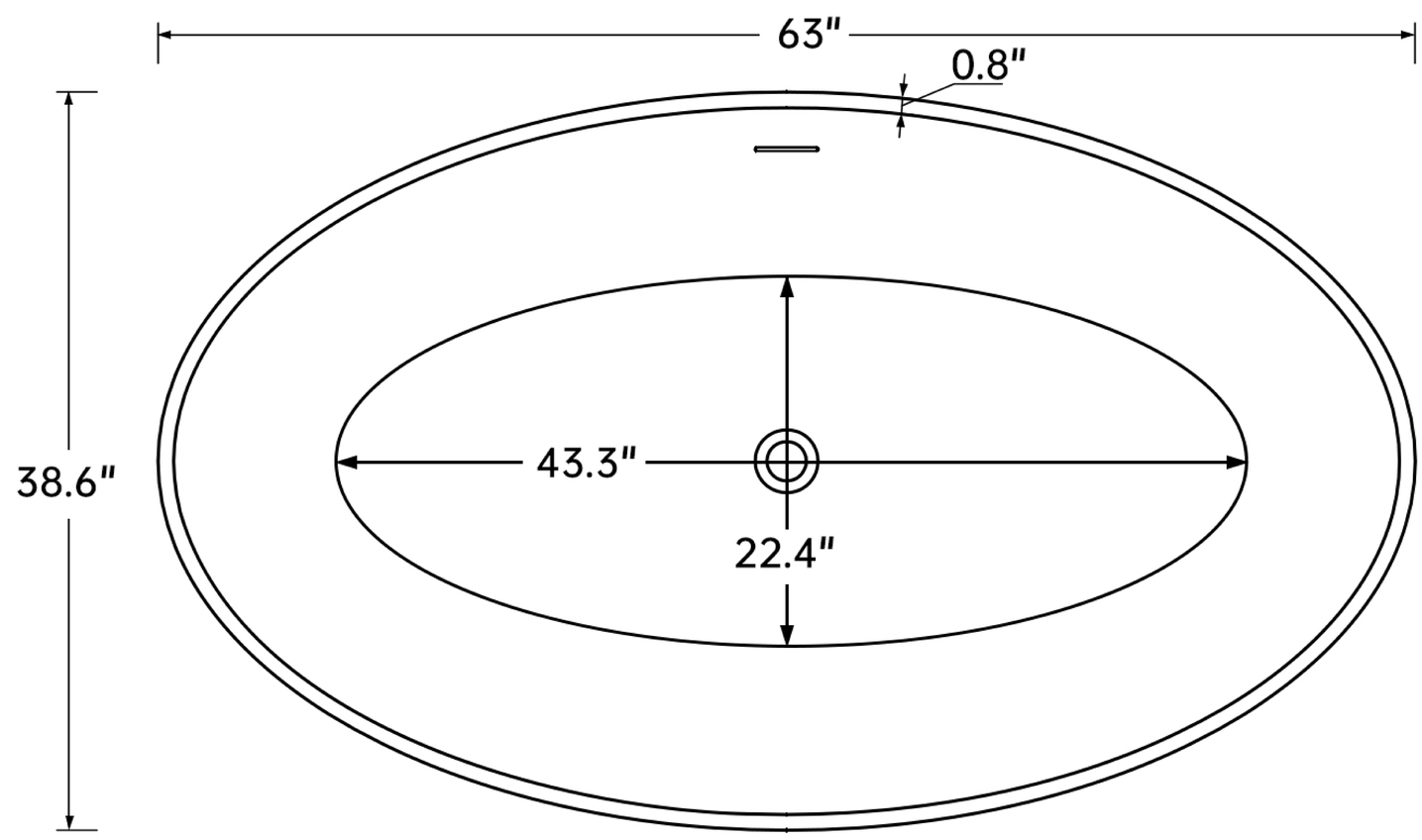

vertical view

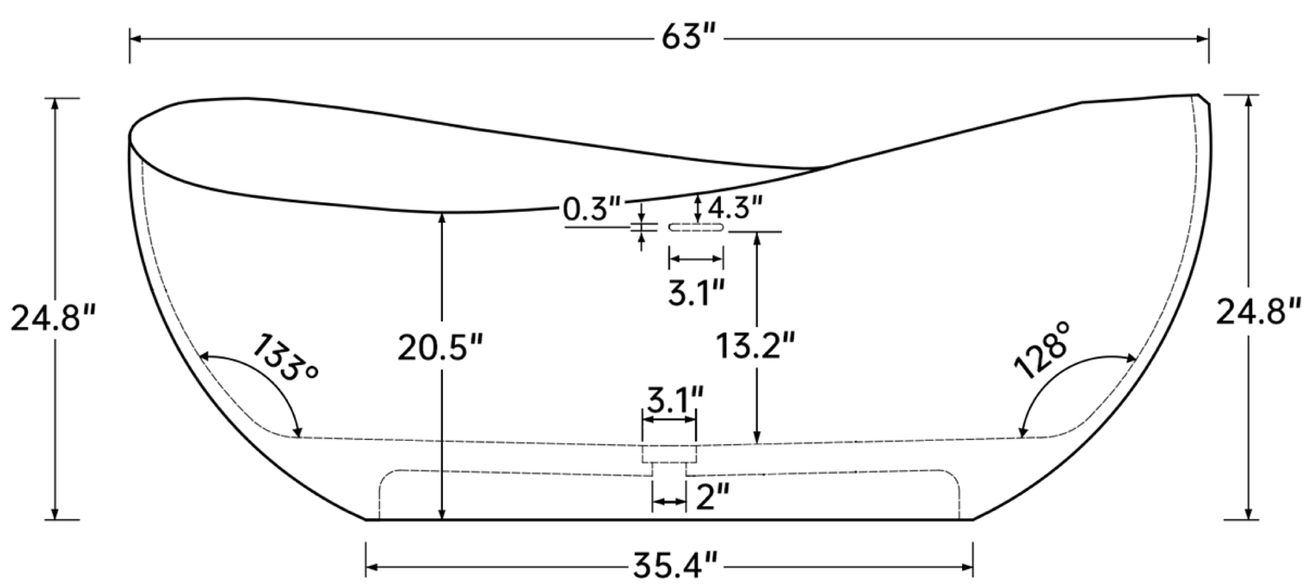

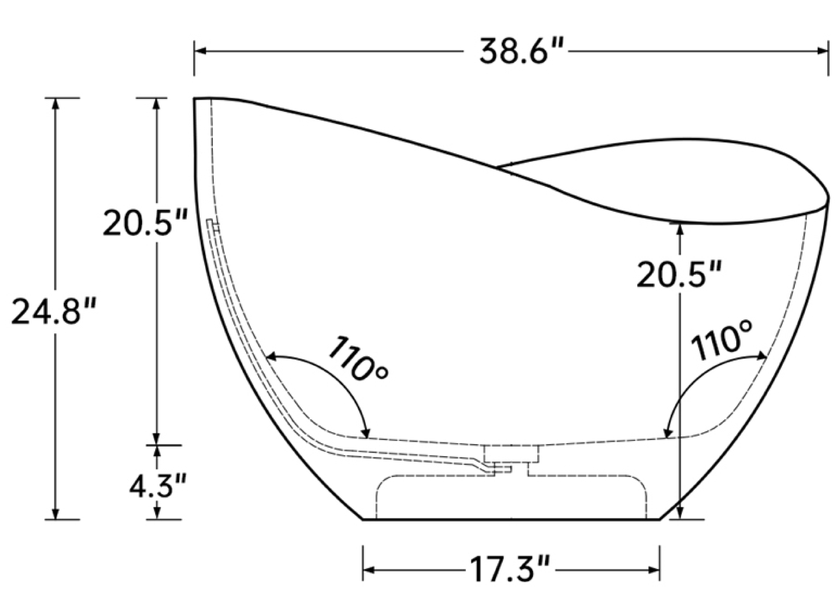

www.altairdesignusa.com

ALTAIR